KAG Drive Configurator

A variety of typical arrangements of sub-assemblies can combined with the Drive Configurator, based on components of our standard programme.

Due to the fact that our motors can be used in a wide range of applications – e.g. for door automation – the result is, in combination with gearboxes, encoders and brakes, a flexible system with great solution potential.

For the construction of an individual entire drive, you will receive the motors and attachment parts at KAG within short delivery time.

KAG Drive Configurator

Motors	Page 14
Motors with planetary gearbox	Page 30
Motors with worm gearbox	Page 37
Motors with spur gearbox	Page 40
Brakes	Page 42
Encoders	Page 45

Drive Configurator – Overview of the possible combinations

				M42		M48	
				x15/I	x30/I	x28/I	x60/I
			Ident no.	222833	222834	222835	222836
			Voltage	24	24	24	24
			Torque in Ncm	4,0	6,5	10	15
			Speed in rpm	3250	3100	3450	3300
Gearboxes	Planetary gearbox	P32I LN	i = 4 (3,7):1	12 Ncm / 878 upm	19 Ncm / 838 upm		
			i = 7 (6,75):1	22 Ncm / 481 upm	35 Ncm / 459 upm		
			i = 14 (13,73):1	41 Ncm / 237 upm	67 Ncm / 226 upm		
			i = 25:1	75 Ncm / 130 upm	122 Ncm / 124 upm		
			i = 46 (45,56):1	137 Ncm / 71 upm	222 Ncm / 67 upm		
			i = 93 (92,7):1	260 Ncm / 35 upm	422 Ncm / 33 upm		
		P42I LN	i = 4 (3,65):1	12 Ncm / 890 upm	19 Ncm / 849 upm	29 Ncm / 945 upm	44 Ncm / 904 upm
			i = 9 (8,63:1	28 Ncm / 377 upm	45 Ncm / 359 upm	69 Ncm / 400 upm	104 Ncm / 382 upm
			i = 14 (13,53):1	41 Ncm / 240 upm	66 Ncm / 229 upm	101 Ncm / 255 upm	152 Ncm / 244 upm
			i = 25 (24,65):1	74 Ncm / 132 upm	120 Ncm / 126 upm	185 Ncm / 140 upm	277 Ncm / 134 upm
			i = 45 (44,69):1	134 Ncm / 73 upm	218 Ncm / 69 upm	335 Ncm / 77 upm	503 Ncm / 74 upm
			i = 50 (50,16):1	140 Ncm / 65 upm	228 Ncm / 62 upm	351 Ncm / 69 upm	527 Ncm / 66 upm
			i = 81 (81,11):1	227 Ncm / 40 upm	369 Ncm / 38 upm	568 Ncm / 43 upm	852 Ncm / 41 upm
			i = 166 (166,4):1	466 Ncm / 20 upm	757 Ncm / 19 upm	1165 Ncm/ 21 upm	###
			i = 302 (301,68):1	845 Ncm / 11 upm	1373 Ncm/ 10 upm	###	###
		P52I LN	i = 4 (3,65):1			29 Ncm / 945 upm	44 Ncm / 904 upm
			i = 9 (8,63:1			69 Ncm / 400 upm	104 Ncm / 382 upm
			i = 14 (13,53):1			101 Ncm / 255 upm	152 Ncm / 244 upm
			i = 25 (24,65):1			185 Ncm / 140 upm	277 Ncm / 134 upm
			i = 45 (44,69):1			335 Ncm / 77 upm	503 Ncm / 74 upm
			i = 50 (50,16):1			351 Ncm / 69 upm	527 Ncm / 66 upm
			i = 81 (81,11):1			568 Ncm / 43 upm	852 Ncm / 41 upm
			i = 166 (166,4):1			1165 Ncm/ 21 upm	1747 Ncm/ 20 upm
			i = 302 (301,68):1			2112 Ncm/ 11 upm	###
		P62I LN	i = 4 (3,65):1				
			i = 9 (8,63:1				
			i = 14 (13,53):1				
			i = 25 (24,65):1				
			i = 45 (44,69):1				
			i = 50 (50,16):1				
			i = 81 (81,11):1				
			i = 166 (166,4):1				
			i = 302 (301,68):1				
	Worm gearbox	SN31	i = 10:1				
			i = 15:1				
		SN40	i = 10:1				
			i = 15:1				
	Spur gearbox	S5	i = 10:1	29 Ncm / 325 upm	47 Ncm / 310 upm	73 Ncm / 345 upm	110 Ncm / 330 upm
			i = 30:1	76 Ncm / 108 upm	129 Ncm / 103 upm	198 Ncm / 115 upm	297 Ncm / 110 upm
			i = 50:1	132 Ncm / 65 upm	215 Ncm / 62 upm	330 Ncm / 69 upm	495 Ncm / 66 upm
			i = 100:1	236 Ncm / 33 upm	384 Ncm / 31 upm	###	###
Encoders	magnetic	IGM4/2	4 Imp	x	x	x	x
		IGM12/2	12 Imp	x	x	x	x
	optical	IGO100/2	100 Imp	x	x	x	x
		IGO500/2	500 Imp	x	x	x	x
Brakes	Spring applied-brake	B37	0,24 Nm	x	x		
		B47	0,5 Nm			x	x
		B56	1,0 Nm				

	M63				M80	
x50/l f. SN31	x25/l	x60/l	x60/l f. SN40	x60/l f. SN31	x40/l	x80/l
222837	222838	222839	222840	223225	222334	222335
24	24	24	24	24	24	24
10	14	30	30	30	38	70
3050	3250	3000	3000	3000	2900	3200
	41 Ncm / 890 upm	88 Ncm / 822 upm				
	97 Ncm / 377 upm	207 Ncm / 348 upm				
	142 Ncm / 240 upm	304 Ncm / 222 upm				
	259 Ncm / 132 upm	555 Ncm / 122 upm				
	469 Ncm / 73 upm	1006 Ncm/ 67 upm				
	492 Ncm / 65 upm	1053 Ncm/ 60 upm				
	795 Ncm / 40 upm	1703 Ncm/ 37 upm				
	1631 Ncm/ 20 upm	###				
	###	###				
	41 Ncm / 890 upm	88 Ncm / 822 upm			1,1 Nm / 795 upm	2,0 Nm / 877 upm
	97 Ncm / 377 upm	207 Ncm / 348 upm			2,6 Nm / 336 upm	4,8 Nm / 371 upm
	142 Ncm / 240 upm	304 Ncm / 222 upm			3,9 Nm / 214 upm	7,1 Nm / 237 upm
	259 Ncm / 132 upm	555 Ncm / 122 upm			7,0 Nm / 118 upm	12,9 Nm / 130 upm
	469 Ncm / 73 upm	1006 Ncm/ 67 upm			12,7 Nm / 65 upm	23,5 Nm / 72 upm
	492 Ncm / 65 upm	1053 Ncm/ 60 upm			13,3 Nm / 58 upm	24,6 Nm / 64 upm
	795 Ncm / 40 upm	1703 Ncm/ 37 upm			21,6 Nm / 36 upm	39,7 Nm / 39 upm
	1631 Ncm/ 20 upm	3494 Ncm/ 18 upm			44,3 Nm / 17 upm	###
	2956 Ncm/ 11 upm	###			###	###
84 Ncm / 305 upm				252 Ncm / 300 upm		
108 Ncm / 203 upm				324 Ncm / 200 upm		
			252 Ncm / 300 upm			
			324 Ncm / 200 upm			
x	x	x	x	x	x	x
x	x	x	x	x	x	x
x	x	x	x	x	x	x
x	x	x	x	x	x	x
x						
	x	x	x	x	x	x

DC-Motor M42x15/I (24V)
Ident-Nr. 222833

- Brushed DC motor with permanent magnet
- Ball bearings
- Lead wires
- Closed zinc-plated housing with zinc-die-cast bearing flanges
- Direction of rotation CW / CCW
- Power output in rated operation: 13.6 Watt
- Multiple combination possibilities with gears, encoders and brakes

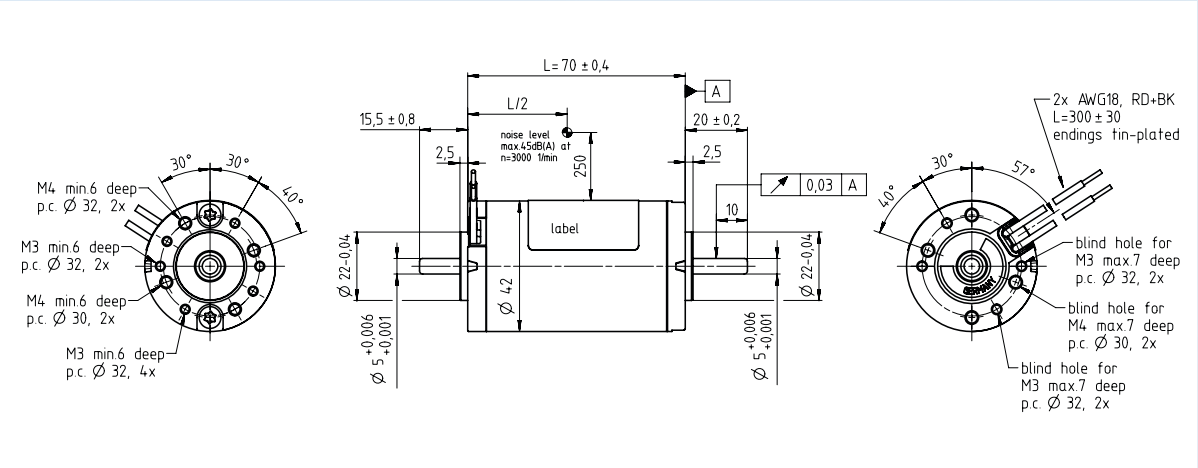

Application on request

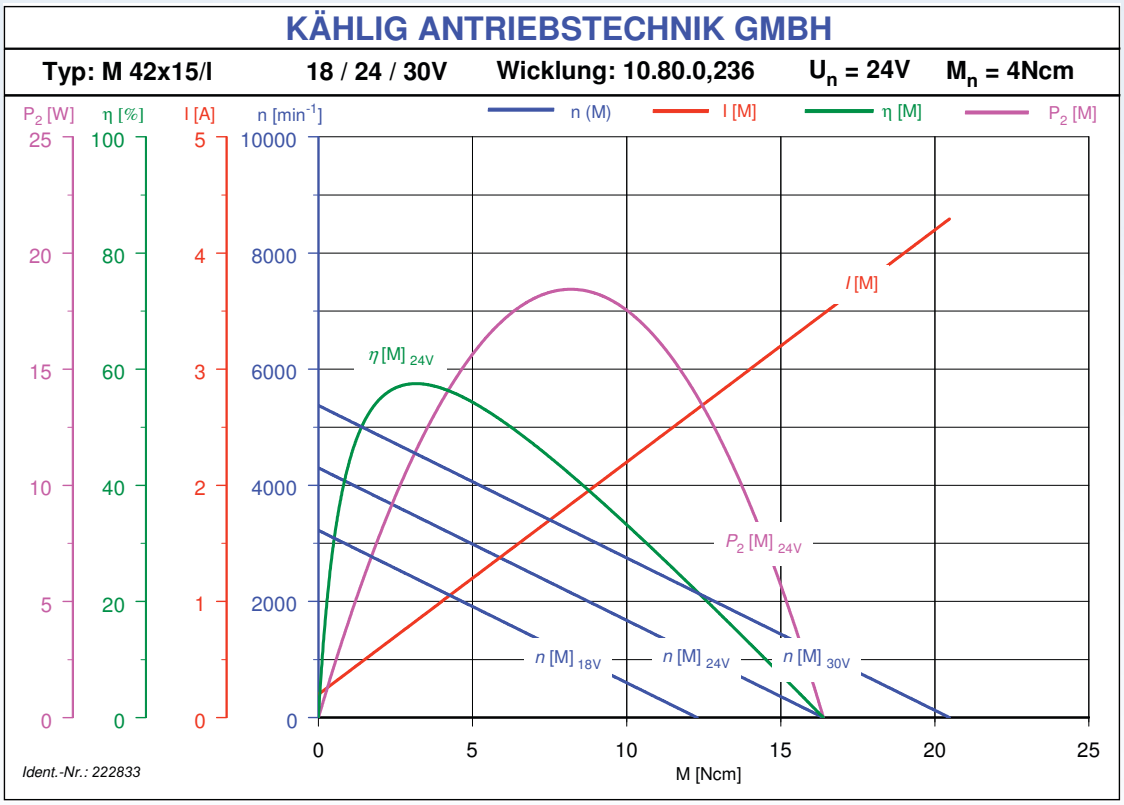

Stand: 10. September 2014 – changes reserved

Performance

	Sign	Unit	Value	Tolerances
Rated voltage	U_N	V	24	
Rated torque [1]	M_N	Ncm	4	
Rated speed [1]	n_N	min^{-1}	3250	±10%
Rated current [1]	I_N	A	1	±20%
No load speed [1]	n_0	min^{-1}	4300	±15%
No load current [1]	I_0	A	0,2	±50%
Rated power output [1]	P_{2N}	W	13,6	
Rated power input [1]	P_{1N}	W	24,0	
Rated effciency [1]	η_N	%	56,7	
Maximum power output [2)3)]	P_{2max}	W	18,4	
Maximum continous torque [2)3)]	M_{max}	Ncm	4,0	
Maximum continous current [2)3)]	I_{max}	A	1,0	
Maximum speed [1)3)]	n_{max}	min^{-1}	10000	
Stall torque [1]	M_H	Ncm	16,4	
Stall current [1]	I_H	A	3,5	
Demagnetization current	I_E	A	7,7	
Connecting resistance [1]	R	Ω	6,9	
Armature resistance [1]	R_A	Ω	6,7	±5%
Armature inductance [1 kHz] [1]	L_A	mH	5,4	
Rise of speed-characteristic [1]	k_D	min^{-1} / Ncm	262,5	
Torque constant [1]	k_M	Ncm / A	5,0	
Voltage constant [1]	k_E	V / $10^3 min^{-1}$	5,6	
Friction torque [1]	M_R	Ncm	-1,0	
Mechanical time constant [1]	T_M	ms	16,1	
Electrical time constant [1]	T_e	ms	0,8	
Rotor inertia	J_R	gcm^2	60	
Maximum case temperature [2]	ϑ_G	°C	80	
Starting voltage [1]	U_A	V	2	
Permissible axial shaft loads [3)]	F_{axial}	N	40	
Permissible radial shaft loads [3)]	F_{radial}	N	100	
Protection class DIN VDE 0530	IP 40			
Duty cycle DIN VDE 0530	S1			
Insulation class DIN VDE 0530	E			
Lifetime at rated torque [h] [1]	3000			
Ambient temperature	-30°C bis +40°C			
Bearing	2 ball bearings			
Interference suppression	Optional			

1) ϑ_w W inding temperature ≈ 20°C 2) $\Delta\vartheta_w$ allowable = 100K
3) The operating at maximum levels reduces the lifespan

Stand: 10. September 2014 – changes reserved

DC-Motor M42x30/I (24V)
Ident-Nr. 222834

- Brushed DC motor with permanent magnet
- Ball bearings
- Lead wires
- Closed zinc-plated housing with zinc-die-cast bearing flanges
- Direction of rotation CW / CCW
- Power output in rated operation: 21,1 Watt
- Multiple combination possibilities with gears, encoders and brakes

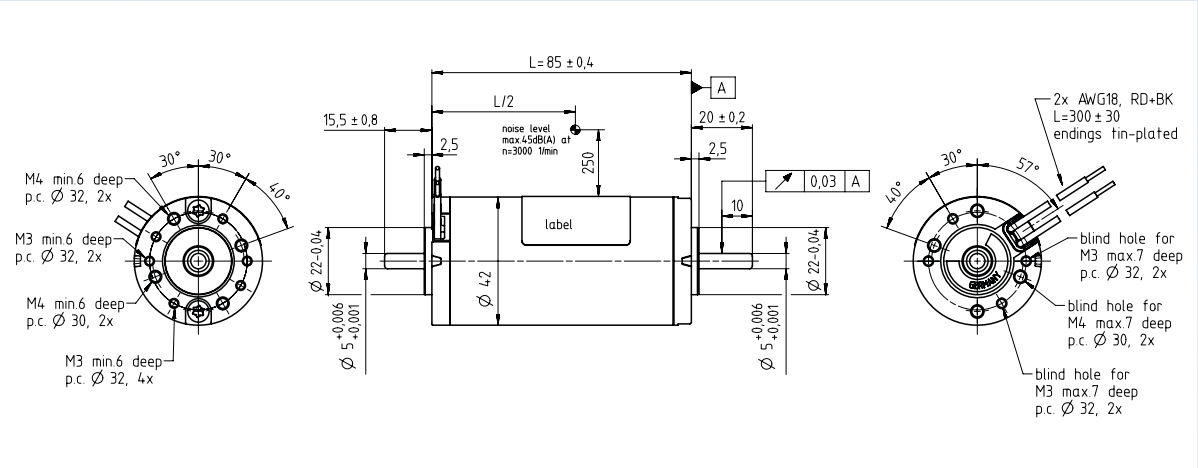

Application on request

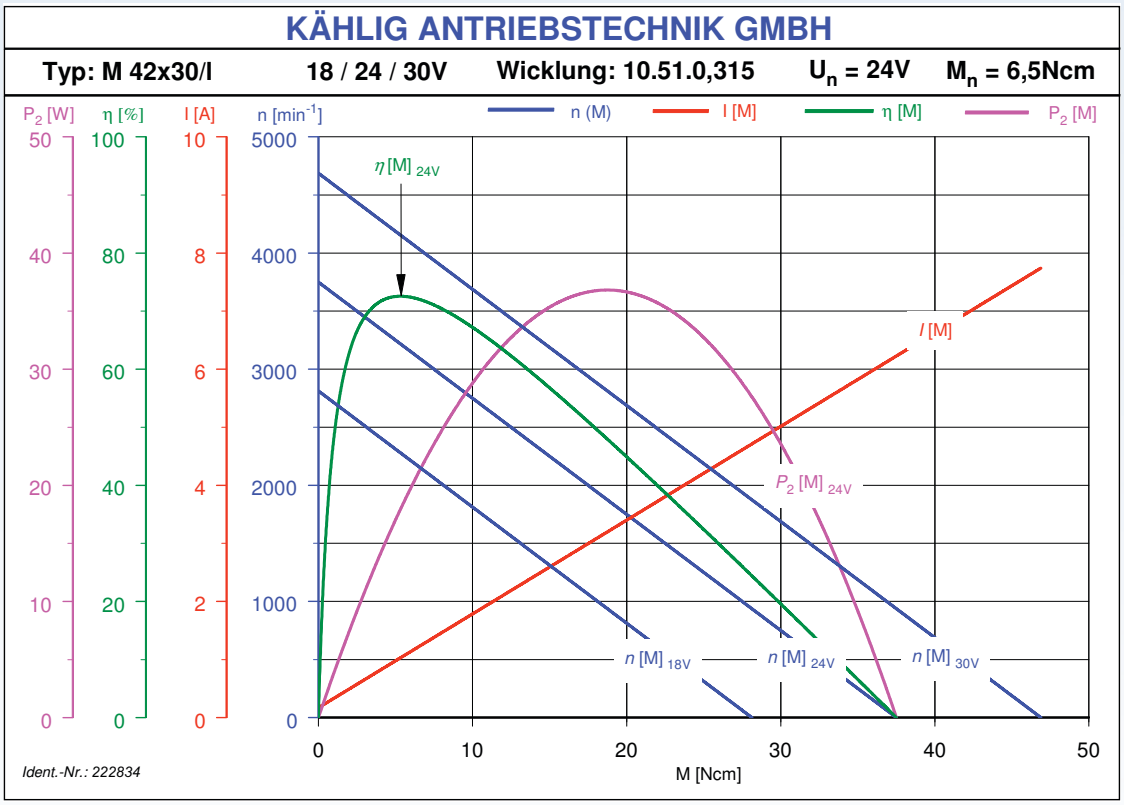

Stand: 10. September 2014 – changes reserved

Performance

	Sign	Unit	Value	Tolerances
Rated voltage	U_N	V	24	
Rated torque [1]	M_N	Ncm	6,5	
Rated speed [1]	n_N	min^{-1}	3100	±10%
Rated current [1]	I_N	A	1,22	±20%
No load speed [1]	n_0	min^{-1}	3750	±15%
No load current [1]	I_0	A	0,17	±50%
Rated power output [1]	P_{2N}	W	21,1	
Rated power input [1]	P_{1N}	W	29,3	
Rated effciency [1]	η_N	%	72,1	
Maximum power output [2)3)]	P_{2max}	W	36,8	
Maximum continous torque [2)3)]	M_{max}	Ncm	6,5	
Maximum continous current [2)3)]	I_{max}	A	1,22	
Maximum speed [1)3)]	n_{max}	min^{-1}	10000	
Stall torque [1]	M_H	Ncm	37,5	
Stall current [1]	I_H	A	6,2	
Demagnetization current	I_E	A	13,7	
Connecting resistance [1]	R	Ω	3,85	
Armature resistance [1]	R_A	Ω	3,35	±5%
Armature inductance [1 kHz] [1]	L_A	mH	3,33	
Rise of speed-characteristic [1]	k_D	min^{-1} / Ncm	100	
Torque constant [1]	k_M	Ncm / A	6,2	
Voltage constant [1]	k_E	V / $10^3 min^{-1}$	6,4	
Friction torque [1]	M_R	Ncm	-1,05	
Mechanical time constant [1]	T_M	ms	8,97	
Electrical time constant [1]	T_e	ms	0,86	
Rotor inertia	J_R	gcm^2	100	
Maximum case temperature [2]	ϑ_G	°C	80	
Starting voltage [1]	U_A	V	2	
Permissible axial shaft loads [3]	F_{axial}	N	40	
Permissible radial shaft loads [3]	F_{radial}	N	100	
Protection class DIN VDE 0530	IP 40			
Duty cycle DIN VDE 0530	S1			
Insulation class DIN VDE 0530	E			
Lifetime at rated torque [h] [1]	3000			
Ambient temperature	-30°C bis +40°C			
Bearing	2 ball bearings			
Interference suppression	Optional			

1) ϑ_W W inding temperature ≈ 20°C 2) $\Delta\vartheta_W$ allowable = 100K
3) The operating at maximum levels reduces the lifespan

Stand: 10. September 2014 – changes reserved

DC-Motor M48x28/I (24V)
Ident-Nr. 222835

- Brushed DC motor with permanent magnet
- Ball bearings
- Lead wires
- Closed zinc-plated housing with zinc-die-cast bearing flanges
- Direction of rotation CW / CCW
- Power output in rated operation: 36,6 Watt
- Multiple combination possibilities with gears, encoders and brakes

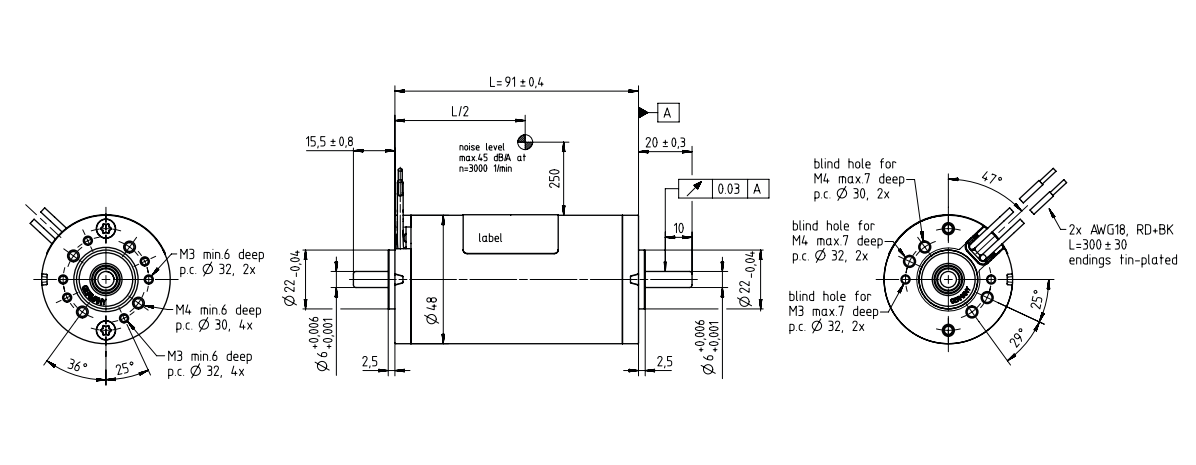

Application on request

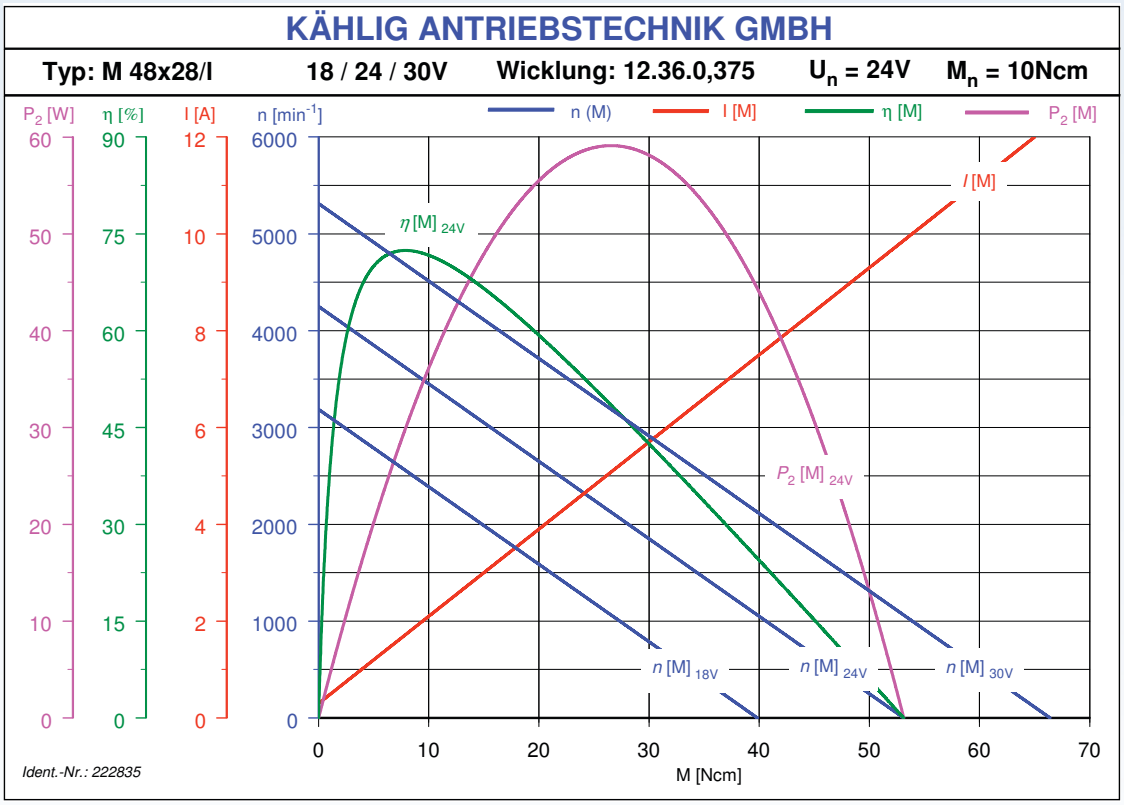

Stand: 10. September 2014 – changes reserved

Performance

	Sign	Unit	Value	Tolerances
Rated voltage	U_N	V	24	
Rated torque [1]	M_N	Ncm	10	
Rated speed [1]	n_N	min^{-1}	3450	±10%
Rated current [1]	I_N	A	2,1	±20%
No load speed [1]	n_0	min^{-1}	4250	±15%
No load current [1]	I_0	A	0,3	±50%
Rated power output [1]	P_{2N}	W	36,1	
Rated power input [1]	P_{1N}	W	50,4	
Rated effciency [1]	η_N	%	71,7	
Maximum power output [2)3)]	P_{2max}	W	59,1	
Maximum continous torque [2)3)]	M_{max}	Ncm	10	
Maximum continous current [2)3)]	I_{max}	A	2,1	
Maximum speed [1)3)]	n_{max}	min^{-1}	10000	
Stall torque [1]	M_H	Ncm	53,1	
Stall current [1]	I_H	A	9,9	
Demagnetization current	I_E	A	14,2	
Connecting resistance [1]	R	Ω	2,433	
Armature resistance [1]	R_A	Ω	2,06	±5%
Armature inductance [1 kHz] [1]	L_A	mH	2,55	
Rise of speed-characteristic [1]	k_D	min^{-1} / Ncm	80	
Torque constant [1]	k_M	Ncm / A	5,6	
Voltage constant [1]	k_E	V / $10^3 min^{-1}$	5,6	
Friction torque [1]	M_R	Ncm	-1,7	
Mechanical time constant [1]	T_M	ms	12,4	
Electrical time constant [1]	T_e	ms	1,05	
Rotor inertia	J_R	gcm^2	175	
Maximum case temperature [2]	ϑ_G	°C	80	
Starting voltage [1]	U_A	V	2	
Permissible axial shaft loads [3]	F_{axial}	N	40	
Permissible radial shaft loads [3]	F_{radial}	N	100	
Protection class DIN VDE 0530	IP 40			
Duty cycle DIN VDE 0530	S1			
Insulation class DIN VDE 0530	E			
Lifetime at rated torque [h] [1]	3000			
Ambient temperature	-30°C bis +40°C			
Bearing	2 ball bearings			
Interference suppression	Optional			

1) ϑ_W W inding temperature ≈ 20°C 2) $\Delta\vartheta_W$ allowable = 100K
3) The operating at maximum levels reduces the lifespan

Stand: 10. September 2014 – changes reserved

DC-Motor M48x60/I (24V)
Ident-Nr. 222836

- Brushed DC motor with permanent magnet
- Ball bearings
- Lead wires
- Closed zinc-plated housing with zinc-die-cast bearing flanges
- Direction of rotation CW / CCW
- Power output in rated operation: 51,8 Watt
- Multiple combination possibilities with gears, encoders and brakes

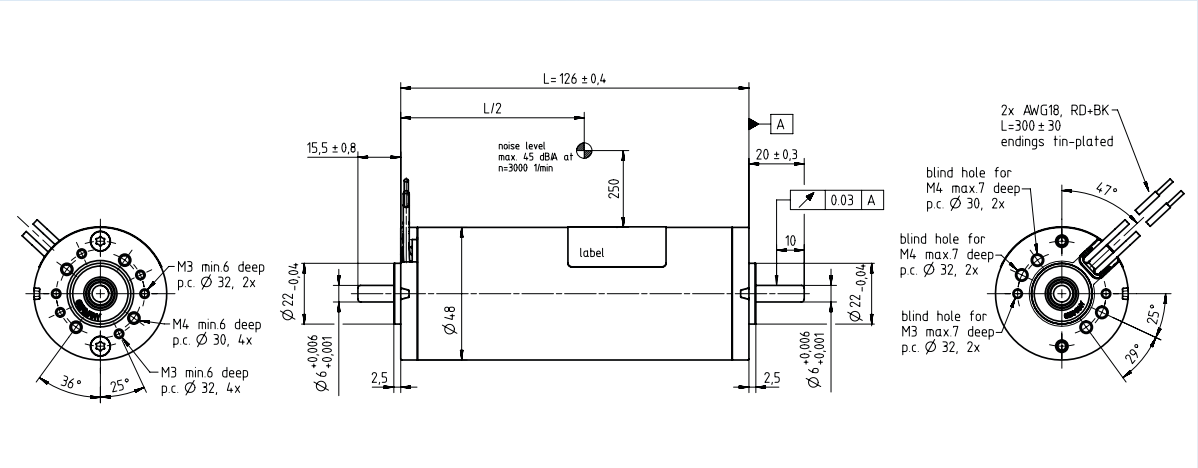

Application on request

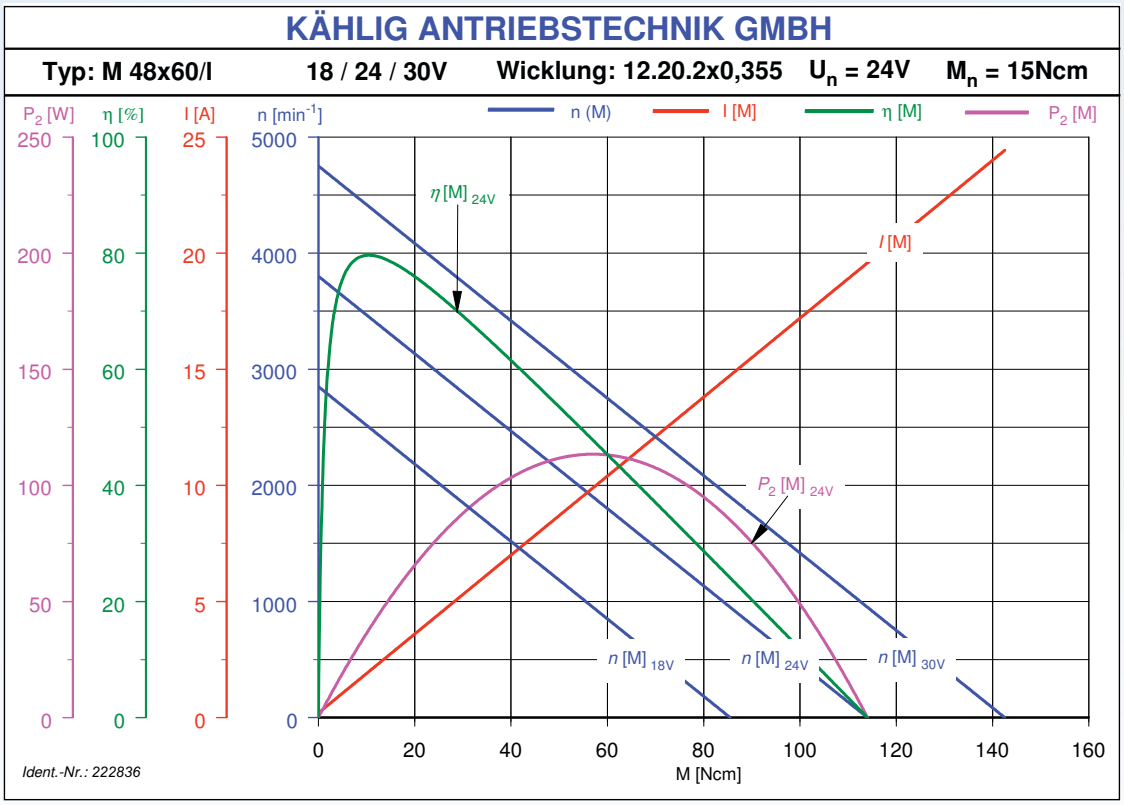

Stand: 10. September 2014 – changes reserved

Performance

	Sign	Unit	Value	Tolerances
Rated voltage	U_N	V	24	
Rated torque [1]	M_N	Ncm	15	
Rated speed [1]	n_N	min^{-1}	3300	±10%
Rated current [1]	I_N	A	2,75	±20%
No load speed [1]	n_0	min^{-1}	3800	±15%
No load current [1]	I_0	A	0,2	±50%
Rated power output [1]	P_{2N}	W	51,8	
Rated power input [1]	P_{1N}	W	66,0	
Rated effciency [1]	η_N	%	78,5	
Maximum power output [2)3)]	P_{2max}	W	113,4	
Maximum continous torque [2)3)]	M_{max}	Ncm	15	
Maximum continous current [2)3)]	I_{max}	A	2,75	
Maximum speed [1)3)]	n_{max}	min^{-1}	10000	
Stall torque [1]	M_H	Ncm	114	
Stall current [1]	I_H	A	19,6	
Demagnetization current	I_E	A	25,5	
Connecting resistance [1]	R	Ω	1,23	
Armature resistance [1]	R_A	Ω	1,08	±5%
Armature inductance [1 kHz] [1]	L_A	mH	1,42	
Rise of speed-characteristic [1]	k_D	min^{-1} / Ncm	33,3	
Torque constant [1]	k_M	Ncm / A	5,9	
Voltage constant [1]	k_E	V / $10^3 min^{-1}$	6,3	
Friction torque [1]	M_R	Ncm	1,2	
Mechanical time constant [1]	T_M	ms	11,4	
Electrical time constant [1]	T_e	ms	1,16	
Rotor inertia	J_R	gcm^2	383	
Maximum case temperature [2]	ϑ_G	°C	80	
Starting voltage [1]	U_A	V	2	
Permissible axial shaft loads [3]	F_{axial}	N	40	
Permissible radial shaft loads [3]	F_{radial}	N	100	
Protection class DIN VDE 0530	IP 40			
Duty cycle DIN VDE 0530	S1			
Insulation class DIN VDE 0530	E			
Lifetime at rated torque [h] [1]	3000			
Ambient temperature	-30°C bis +40°C			
Bearing	2 ball bearings			
Interference suppression	Optional			

1) ϑ_W W inding temperature ≈ 20°C 2) $\Delta\vartheta_W$ allowable = 100K
3) The operating at maximum levels reduces the lifespan

Stand: 10. September 2014 – changes reserved

DC-Motor M63x25 (24V)
Ident-Nr. 222838

- Brushed DC motor with permanent magnet
- Ball bearings
- Lead wires
- Closed zinc-plated housing with zinc-die-cast bearing flanges
- Direction of rotation CW / CCW
- Power output in rated operation: 48 Watt
- Multiple combination possibilities with gears, encoders and brakes

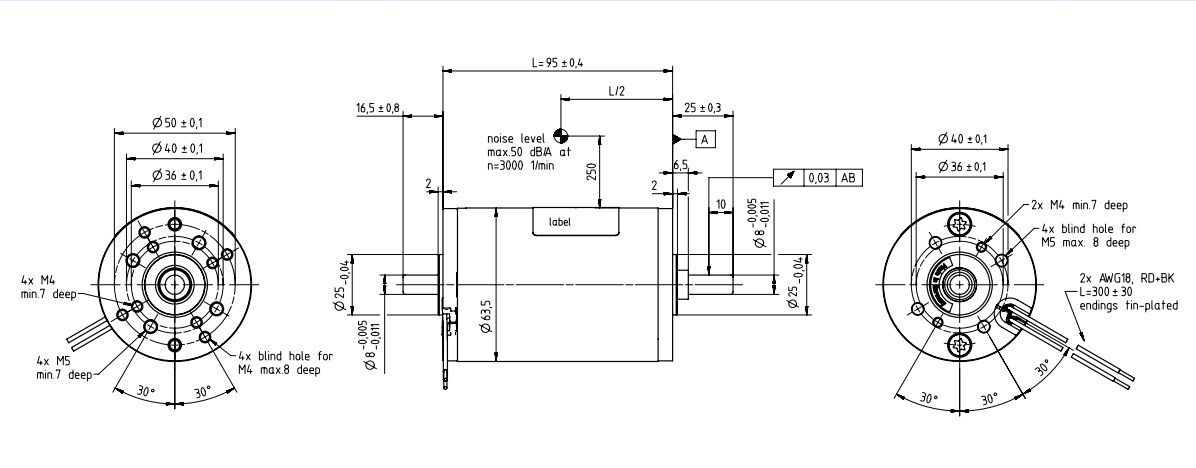

Application on request

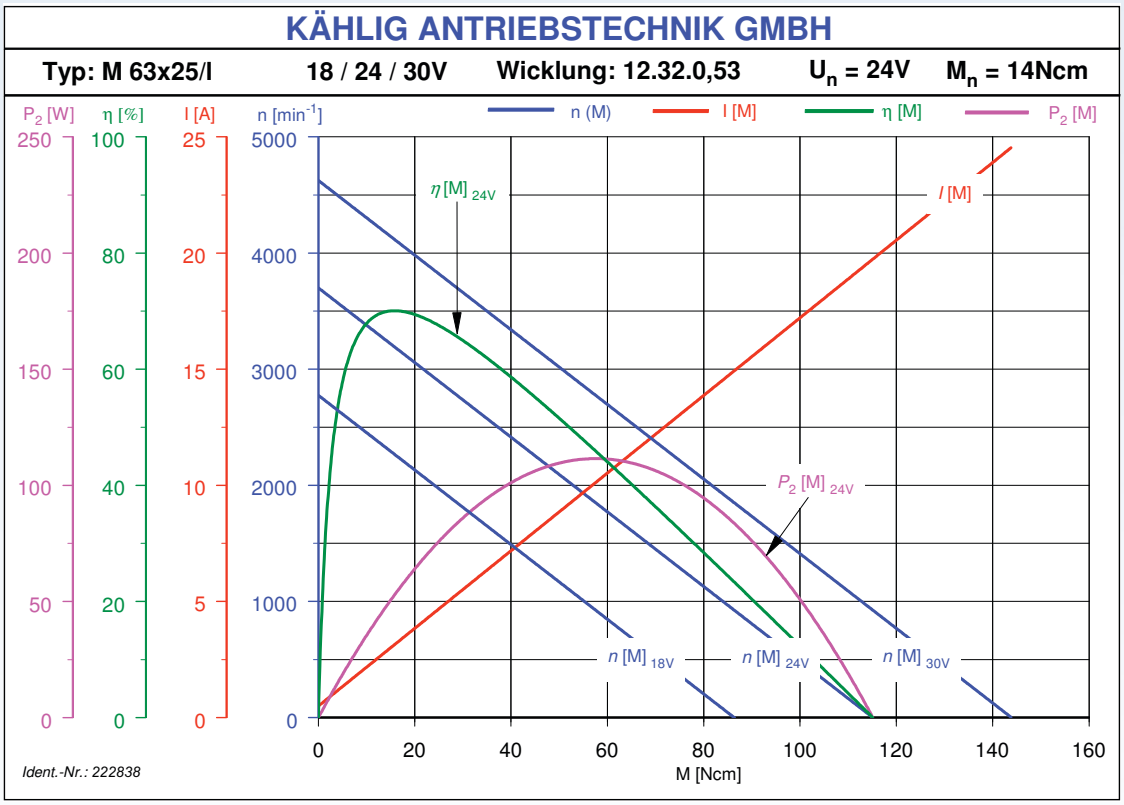

Stand: 10. September 2014 – changes reserved

Performance

	Sign	Unit	Value	Tolerances
Rated voltage	U_N	V	24	
Rated torque [1]	M_N	Ncm	14	
Rated speed [1]	n_N	min^{-1}	3250	±10%
Rated current [1]	I_N	A	2,84	±20%
No load speed [1]	n_0	min^{-1}	3700	±15%
No load current [1]	I_0	A	0,5	±50%
Rated power output [1]	P_{2N}	W	48,0	
Rated power input [1]	P_{1N}	W	68,1	
Rated effciency [1]	η_N	%	70,5	
Maximum power output [2)3)]	P_{2max}	W	116,6	
Maximum continous torque [2)3)]	M_{max}	Ncm	14	
Maximum continous current [2)3)]	I_{max}	A	2,84	
Maximum speed [1)3)]	n_{max}	min^{-1}	8000	
Stall torque [1]	M_H	Ncm	115	
Stall current [1]	I_H	A	19,7	
Demagnetization current	I_E	A	22,3	
Connecting resistance [1]	R	Ω	1,216	
Armature resistance [1]	R_A	Ω	1,03	±5%
Armature inductance [1 kHz] [1]	L_A	mH	1,97	
Rise of speed-characteristic [1]	k_D	min^{-1} / Ncm	32,1	
Torque constant [1]	k_M	Ncm / A	6,0	
Voltage constant [1]	k_E	V / $10^3 min^{-1}$	6,5	
Friction torque [1]	M_R	Ncm	-3,0	
Mechanical time constant [1]	T_M	ms	16	
Electrical time constant [1]	T_e	ms	1,62	
Rotor inertia	J_R	gcm^2	596	
Maximum case temperature [2]	ϑ_G	°C	80	
Starting voltage [1]	U_A	V	2	
Permissible axial shaft loads [3]	F_{axial}	N	110	
Permissible radial shaft loads [3]	F_{radial}	N	300	
Protection class DIN VDE 0530	IP 40			
Duty cycle DIN VDE 0530	S1			
Insulation class DIN VDE 0530	E			
Lifetime at rated torque [h] [1]	3000			
Ambient temperature	-30°C bis +40°C			
Bearing	2 ball bearings			
Interference suppression	Optional			

1) ϑ_W W inding temperature ≈ 20°C 2) $\Delta\vartheta_W$ allowable = 100K
3) The operating at maximum levels reduces the lifespan

Stand: 10. September 2014 – changes reserved

DC-Motor M63x60 (24V)
Ident-Nr. 222829

- Brushed DC motor with permanent magnet
- Ball bearings
- Lead wires
- Closed zinc-plated housing with zinc-die-cast bearing flanges
- Direction of rotation CW / CCW
- Power output in rated operation: 94,2 Watt
- Multiple combination possibilities with gears, encoders and brakes

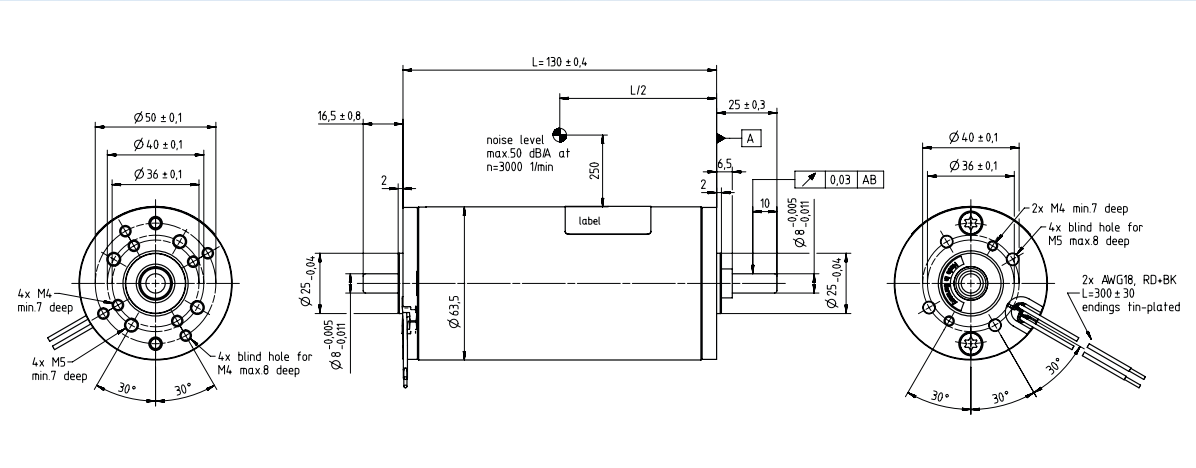

Application on request

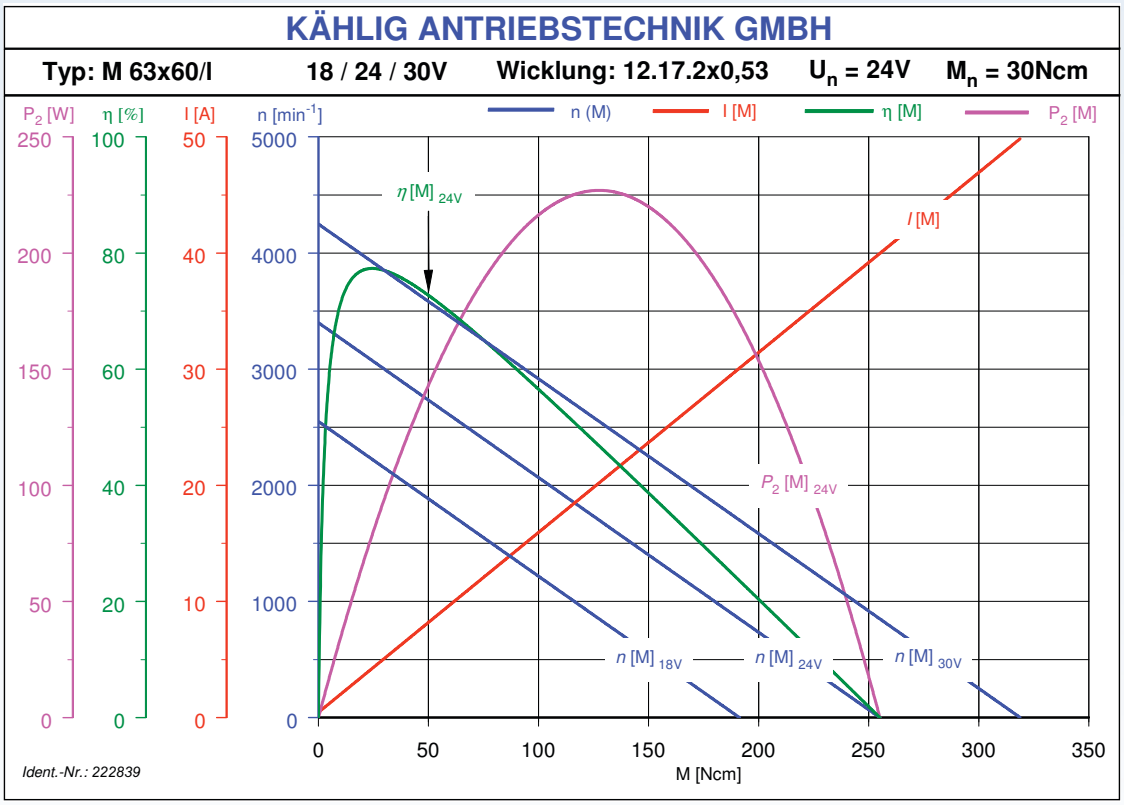

Stand: 10. September 2014 – changes reserved

Performance

	Sign	Unit	Value	Tolerances
Rated voltage	U_N	V	24	
Rated torque [1]	M_N	Ncm	30	
Rated speed [1]	n_N	min^{-1}	3000	±10%
Rated current [1]	I_N	A	5,1	±20%
No load speed [1]	n_0	min^{-1}	3400	±15%
No load current [1]	I_0	A	0,45	±50%
Rated power output [1]	P_{2N}	W	94,2	
Rated power input [1]	P_{1N}	W	122,4	
Rated effciency [1]	η_N	%	77,0	
Maximum power output [2)3)]	P_{2max}	W	227	
Maximum continous torque [2)3)]	M_{max}	Ncm	30	
Maximum continous current [2)3)]	I_{max}	A	5,1	
Maximum speed [1)3)]	n_{max}	min^{-1}	8000	
Stall torque [1]	M_H	Ncm	255	
Stall current [1]	I_H	A	40	
Demagnetization current	I_E	A	41,9	
Connecting resistance [1]	R	Ω	0,6	
Armature resistance [1]	R_A	Ω	0,42	±5%
Armature inductance [1 kHz] [1]	L_A	mH	0,96	
Rise of speed-characteristic [1]	k_D	min^{-1} / Ncm	13,3	
Torque constant [1]	k_M	Ncm / A	6,5	
Voltage constant [1]	k_E	V / $10^3 min^{-1}$	7,1	
Friction torque [1]	M_R	Ncm	-2,9	
Mechanical time constant [1]	T_M	ms	11,18	
Electrical time constant [1]	T_e	ms	1,6	
Rotor inertia	J_R	gcm^2	1209	
Maximum case temperature [2]	ϑ_G	°C	80	
Starting voltage [1]	U_A	V	2	
Permissible axial shaft loads [3]	F_{axial}	N	110	
Permissible radial shaft loads [3]	F_{radial}	N	300	
Protection class DIN VDE 0530	IP 40			
Duty cycle DIN VDE 0530	S1			
Insulation class DIN VDE 0530	E			
Lifetime at rated torque [h] [1]	3000			
Ambient temperature	-30°C bis +40°C			
Bearing	2 ball bearings			
Interference suppression	Optional			

1) ϑ_W W inding temperature ≈ 20°C 2) $\Delta\vartheta_W$ allowable = 100K
3) The operating at maximum levels reduces the lifespan

Stand: 10. September 2014 – changes reserved

DC-Motor M80x40/I (24V)
Ident-Nr. 222334b

- Brushed DC motor with permanent magnet
- Ball bearings
- Lead wires
- Closed zinc-plated housing with zinc-die-cast bearing flanges
- Direction of rotation CW / CCW
- Power output in rated operation: 115,4 Watt
- Multiple combination possibilities with gears, encoders and brakes

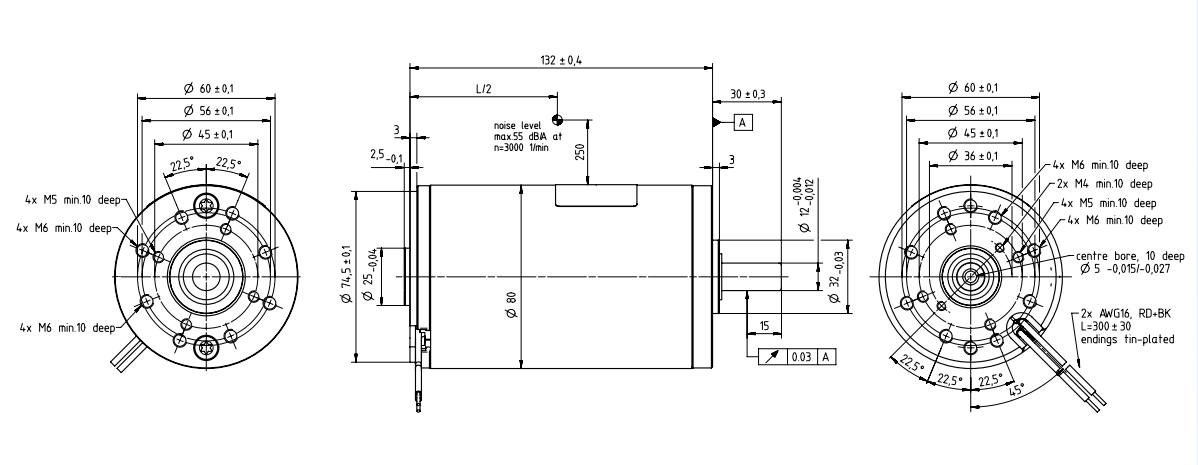

Application on request

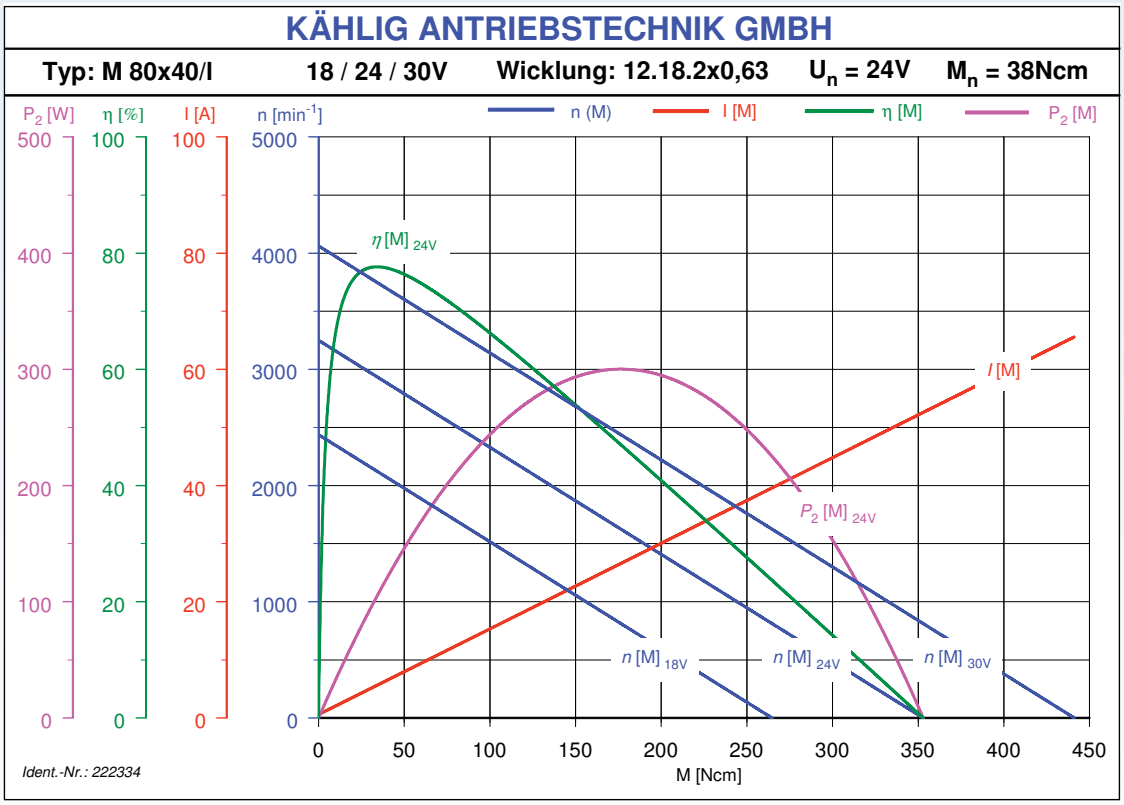

Stand: 10. September 2014 – changes reserved

Performance

	Sign	Unit	Value	Tolerances
Rated voltage	U_N	V	24	
Rated torque [1]	M_N	Ncm	38	
Rated speed [1]	n_N	min^{-1}	2900	±10%
Rated current [1]	I_N	A	6,2	±20%
No load speed [1]	n_0	min^{-1}	3250	±15%
No load current [1]	I_0	A	0,6	±50%
Rated power output [1]	P_{2N}	W	115,4	
Rated power input [1]	P_{1N}	W	148,8	
Rated effciency [1]	η_N	%	77,6	
Maximum power output [2)3)]	P_{2max}	W	300	
Maximum continous torque [2)3)]	M_{max}	Ncm	38	
Maximum continous current [2)3)]	I_{max}	A	6,2	
Maximum speed [1)3)]	n_{max}	min^{-1}	6000	
Stall torque [1]	M_H	Ncm	353	
Stall current [1]	I_H	A	52,5	
Demagnetization current	I_E	A	45,2	
Connecting resistance [1]	R	Ω	0,456	
Armature resistance [1]	R_A	Ω	0,268	±5%
Armature inductance [1 kHz] [1]	L_A	mH	0,9	
Rise of speed-characteristic [1]	k_D	min^{-1} / Ncm	-9,21	
Torque constant [1]	k_M	Ncm / A	6,97	
Voltage constant [1]	k_E	V / $10^3 min^{-1}$	7,38	
Friction torque [1]	M_R	Ncm	-4,07	
Mechanical time constant [1]	T_M	ms	10,24	
Electrical time constant [1]	T_e	ms	1,97	
Rotor inertia	J_R	gcm^2	1900	
Maximum case temperature [2]	ϑ_G	°C	80	
Starting voltage [1]	U_A	V	2	
Permissible axial shaft loads [3]	F_{axial}	N	180	
Permissible radial shaft loads [3]	F_{radial}	N	350	
Protection class DIN VDE 0530	IP 40			
Duty cycle DIN VDE 0530	S1			
Insulation class DIN VDE 0530	E			
Lifetime at rated torque [h] [1]	3000			
Ambient temperature	-30°C bis +40°C			
Bearing	2 ball bearings			
Interference suppression	2xL (3µH)			

1) ϑ_W W inding temperature ≈ 20°C 2) $\Delta\vartheta_W$ allowable = 100K
3) The operating at maximum levels reduces the lifespan

Stand: 10. September 2014 – changes reserved

DC-Motor M80x80/I (24V)
Ident-Nr. 222335b

- Brushed DC motor with permanent magnet
- Ball bearings
- Lead wires
- Closed zinc-plated housing with zinc-die-cast bearing flanges
- Direction of rotation CW / CCW
- Power output in rated operation: 233,1 Watt
- Multiple combination possibilities with gears, encoders and brakes

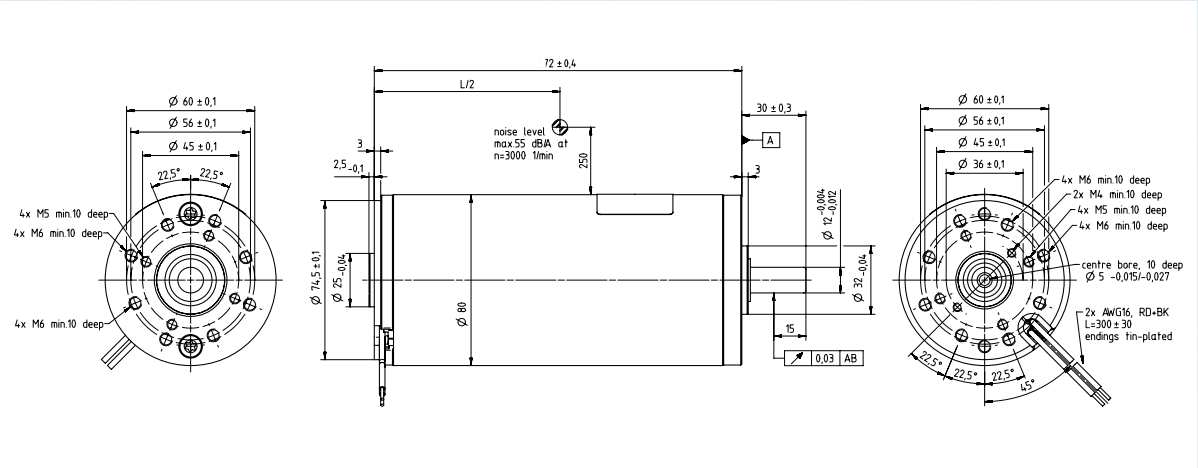

Application on request

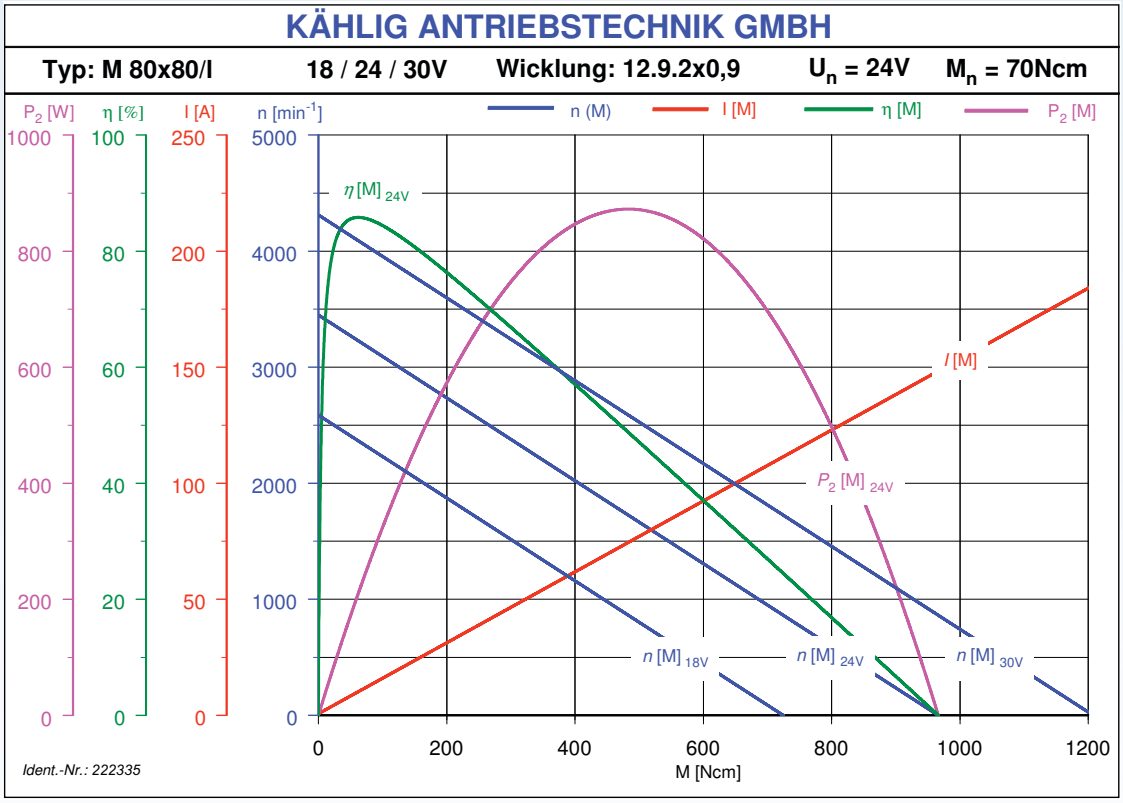

Stand: 10. September 2014 – changes reserved

Performance

	Sign	Unit	Value	Tolerances
Rated voltage	U_N	V	24	
Rated torque [1]	M_N	Ncm	70	
Rated speed [1]	n_N	min^{-1}	3200	±10%
Rated current [1]	I_N	A	11,4	±20%
No load speed [1]	n_0	min^{-1}	3450	±15%
No load current [1]	I_0	A	0,7	±50%
Rated power output [1]	P_{2N}	W	234,6	
Rated power input [1]	P_{1N}	W	273,6	
Rated effciency [1]	η_N	%	85,7	
Maximum power output [2)3)]	P_{2max}	W	872,5	
Maximum continous torque [2)3)]	M_{max}	Ncm	70	
Maximum continous current [2)3)]	I_{max}	A	11,4	
Maximum speed [1)3)]	n_{max}	min^{-1}	6000	
Stall torque [1]	M_H	Ncm	966	
Stall current [1]	I_H	A	148,4	
Demagnetization current	I_E	A	95	
Connecting resistance [1]	R	Ω	0,16	
Armature resistance [1]	R_A	Ω	0,1	±5%
Armature inductance [1 kHz] [1]	L_A	mH	0,33	
Rise of speed-characteristic [1]	k_D	min^{-1} / Ncm	3,6	
Torque constant [1]	k_M	Ncm / A	6,5	
Voltage constant [1]	k_E	V / $10^3 min^{-1}$	7	
Friction torque [1]	M_R	Ncm	-4,6	
Mechanical time constant [1]	T_M	ms	7,5	
Electrical time constant [1]	T_e	ms	2	
Rotor inertia	J_R	gcm^2	3300	
Maximum case temperature [2]	ϑ_G	°C	80	
Starting voltage [1]	U_A	V	2	
Permissible axial shaft loads [3]	F_{axial}	N	180	
Permissible radial shaft loads [3]	F_{radial}	N	350	
Protection class DIN VDE 0530	IP 40			
Duty cycle DIN VDE 0530	S1			
Insulation class DIN VDE 0530	E			
Lifetime at rated torque [h] [1]	3000			
Ambient temperature	-30°C bis +40°C			
Bearing	2 ball bearings			
Interference suppression	2xL (3µH)			

1) ϑ_W W inding temperature ≈ 20°C 2) $\Delta\vartheta_W$ allowable = 100K
3) The operating at maximum levels reduces the lifespan

Stand: 10. September 2014 – changes reserved

Motor M42/I
with planetary gear P32I LN

- Steel gears, output shaft and housing, Grease lubrication for life, Output shaft in 2 ball bearings, end-plates made of aluminium

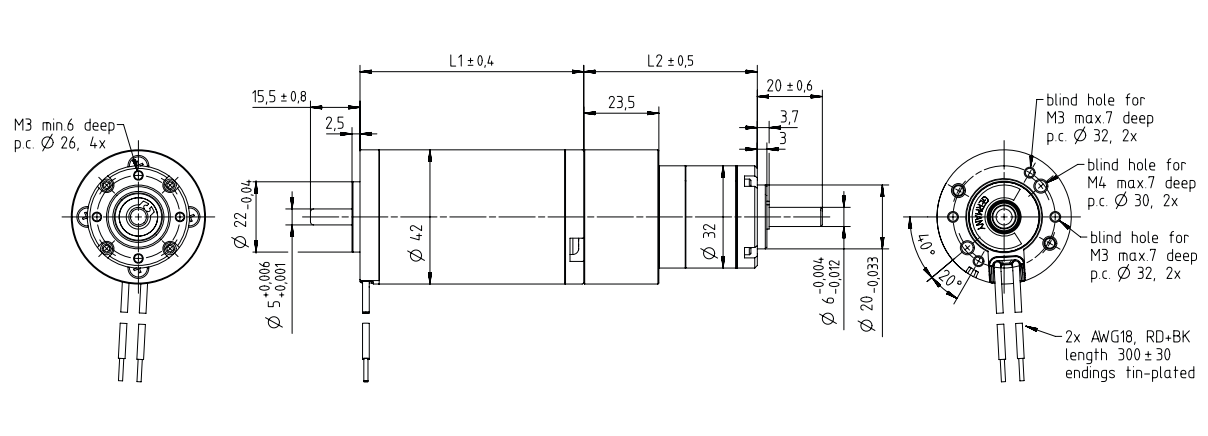

Application on request

Gear reduction table M42xXX/I+ P32I LN

Gear reduction	number of Gear stages	Efficiency	M42x15/I L1 = 70mm		M42x30/I L1 = 85mm	
			Speed	Torque	Speed	Torque
[i = x:1]	[x]	[%]	[1/min]	[Ncm]	[1/min]	[Ncm]
4	1	80	813	13	775	21
7	1	80	464	22	443	36
14	2	75	232	42	221	68
25	2	75	130	75	124	122
46	2	75	71	138	68	224
93	3	70	35	260	33	423

*) Motor have to be operated with current limitation

General gear data

Number of gear stages	[x]	1	2	3
Maximum torque	[Ncm]	75	225	450
Recommended input speed	[1/min]	< 3000		
Permissible axial shaft load	[N]	10	20	30
Permissible radial shaft load	[N]	40	70	100
Backlash unloaded	[°]	1,5	1,55	1,6
Temperature range	[°C]	-30 … 80		
Gear length L2	[mm]	55,8	65,3	74,8

Stand: 22. Oktober 2014 – changes reserved

Motor M42/I
with planetary gear P42I LN

excellent drives

- Steel gears, output shaft and housing, Grease lubrication for life, Output shaft in 2 ball bearings, end-plates made of aluminium

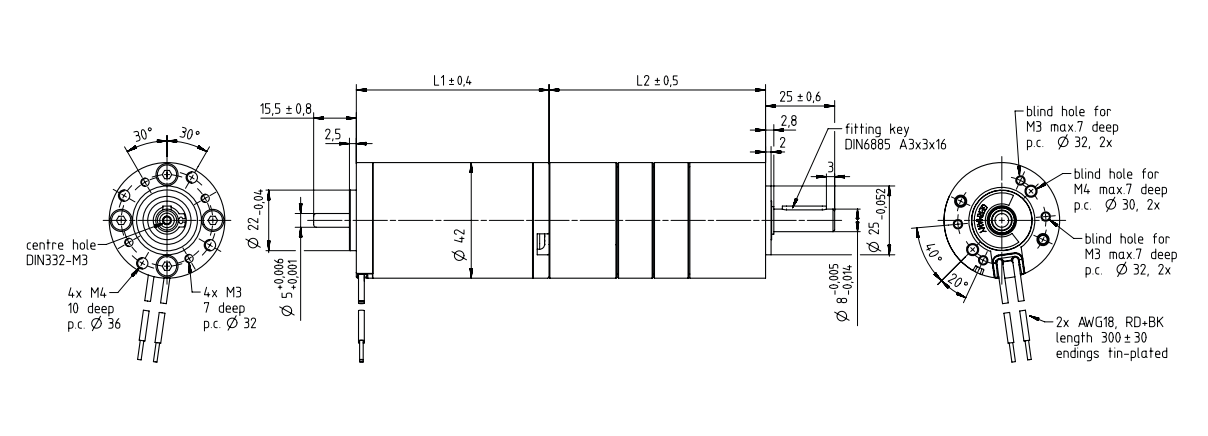

Application on request

Gear reduction table M42xXX/I+ P42I LN

Gear reduction	number of Gear stages	Efficiency	M42x15/I L1 = 70mm		M42x30/I L1 = 85mm	
			Speed	Torque	Speed	Torque
[i = x:1]	[x]	[%]	[1/min]	[Ncm]	[1/min]	[Ncm]
4	1	80	813	13	775	21
9	1	80	368	29	344	47
14	2	75	232	42	221	68
25	2	75	130	75	124	122
45	2	75	72	135	69	219
50	3	70	65	140	62	228
81	3	70	40	227	38	369
166	3	70	20	465	19	755
302	3	70	11	846	10	1374

*) Motor have to be operated with current limitation

General gear data

Number of gear stages	[x]	1	2	3
Maximum torque	[Ncm]	300	750	1500
Recommended input speed	[1/min]	< 3000		
Permissible axial shaft load	[N]	50	80	110
Permissible radial shaft load	[N]	160	230	300
Backlash unloaded	[°]	0,9	0,95	1
Temperature range	[°C]	-30 … 40		
Gear length L2	[mm]	76	89,1	102,2

Stand: 22. Oktober 2014 – changes reserved

Motor M48/I
with planetary gear P42I LN

- Steel gears, output shaft and housing, Grease lubrication for life, Output shaft in 2 ball bearings, end-plates made of aluminium

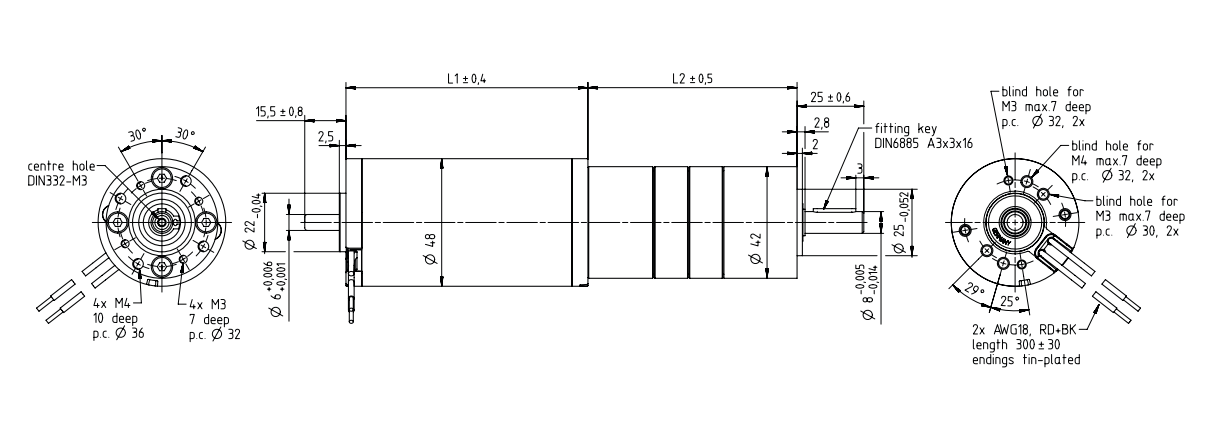

Application on request

Gear reduction table M48xXX/I+ P42I LN

Gear reduction	number of Gear stages	Efficiency	M48x28/I L1 = 91mm		M48x60/I L1 = 126mm	
			Speed	Torque	Speed	Torque
[i = x:1]	[x]	[%]	[1/min]	[Ncm]	[1/min]	[Ncm]
4	1	80	862	32	825	48
9	1	80	383	72	367	108
14	2	75	246	105	236	158
25	2	75	138	188	132	281
45	2	75	77	338	73	506
50	3	70	69	350	66	525
81	3	70	43	567	41	851
166	3	70	21	1162	20	1743
302	3	70	11	2118	11	3398

*) Motor have to be operated with current limitation

General gear data

Number of gear stages	[x]	1	2	3
Maximum torque	[Ncm]	300	750	1500
Recommended input speed	[1/min]	< 3000		
Permissible axial shaft load	[N]	50	80	110
Permissible radial shaft load	[N]	160	230	300
Backlash unloaded	[°]	0,9	0,95	1
Temperature range	[°C]	-30 … 80		
Gear length L2	[mm]	76	89,1	102,2

Stand: 22. Oktober 2014 – changes reserved

Motor M48/I
with planetary gear P52I LN

excellent drives

- Steel gears, output shaft and housing, Grease lubrication for life, Output shaft in 2 ball bearings, end-plates made of aluminium

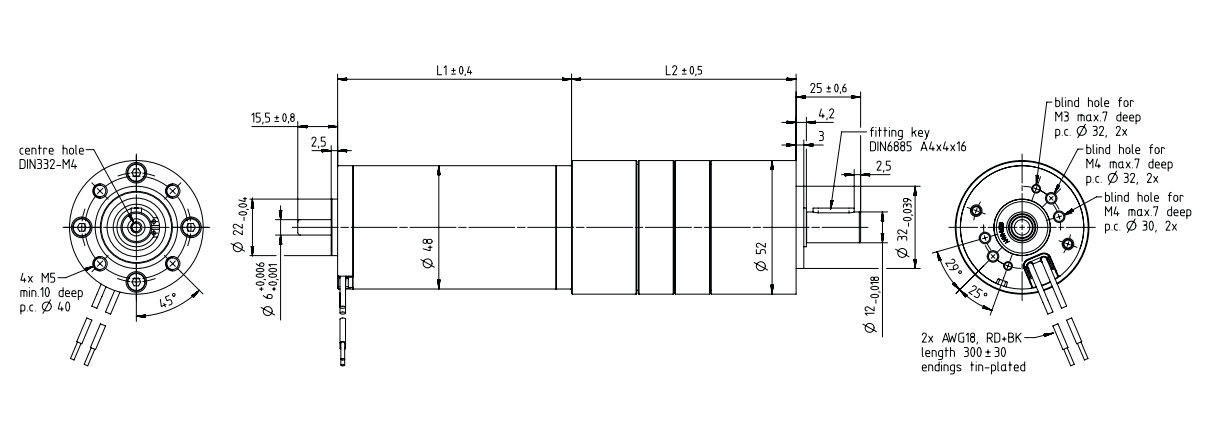

Application on request

Gear reduction table M48xXX/I+ P52I LN

Gear reduction	number of Gear stages	Efficiency	M48x28/I L1 = 91mm		M48x60/I L1 = 126mm	
			Speed	Torque	Speed	Torque
[i = x:1]	[x]	[%]	[1/min]	[Ncm]	[1/min]	[Ncm]
4	1	80	862	32	825	48
9	1	80	383	72	367	108
14	2	75	246	105	236	158
25	2	75	138	188	132	281
45	2	75	77	338	73	506
50	3	70	69	350	66	525
81	3	70	43	567	41	851
166	3	70	21	1162	20	1743
302	3	70	11	2118	11	*) 2500

*) Motor have to be operated with current limitation

General gear data

Number of gear stages	[x]	1	2	3
Maximum torque	[Ncm]	400	1200	2500
Recommended input speed	[1/min]	< 3000		
Permissible axial shaft load	[N]	60	100	150
Permissible radial shaft load	[N]	200	320	450
Backlash unloaded	[°]	0,7	0,75	0,8
Temperature range	[°C]	-30 … 80		
Gear length L2	[mm]	83,7	97,9	112,1

Stand: 22. Oktober 2014 – changes reserved

Motor M63/I
with planetary gear P52I LN

- Steel gears, output shaft and housing, Grease lubrication for life, Output shaft in 2 ball bearings, end-plates made of aluminium

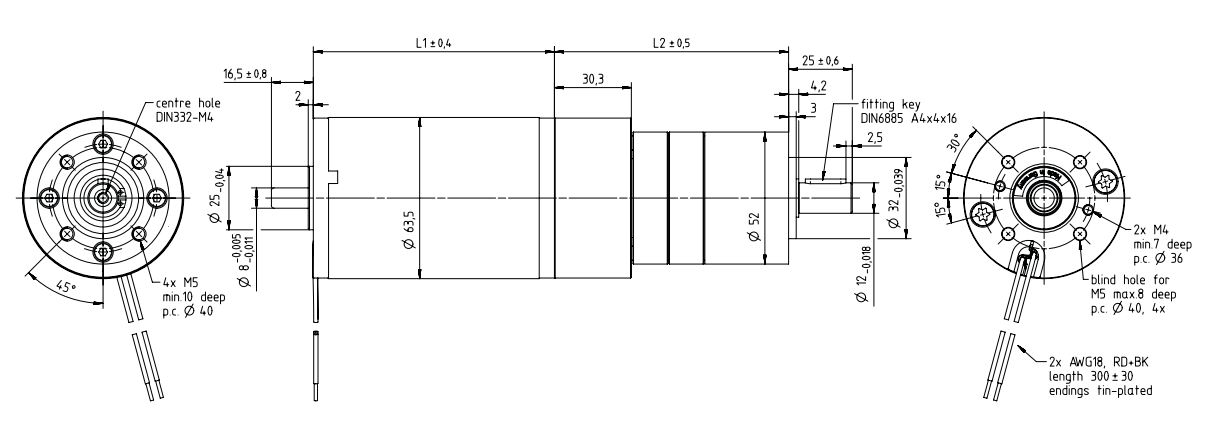

Application on request

Gear reduction table M63xXX/I+ P52I LN

Gear reduction	number of Gear stages	Efficiency	M63x25/I L1 = 95mm		M63x60/I L1 = 130mm	
			Speed	Torque	Speed	Torque
[i = x:1]	[x]	[%]	[1/min]	[Ncm]	[1/min]	[Ncm]
4	1	80	893	45	750	96
9	1	80	361	109	333	216
14	2	75	232	147	214	315
25	2	75	130	263	120	563
45	2	75	72	473	67	1013
50	3	70	65	490	60	1050
81	3	70	40	794	37	1701
166	3	70	20	1627	18	*) 2500
302	3	70	11	*) 2500	10	*) 2500

*) Motor have to be operated with current limitation

General gear data

Number of gear stages	[x]	1	2	3
Maximum torque	[Ncm]	400	1200	2500
Recommended input speed	[1/min]	< 3000		
Permissible axial shaft load	[N]	60	100	150
Permissible radial shaft load	[N]	200	320	450
Backlash unloaded	[°]	0,7	0,75	0,8
Temperature range	[°C]	-30 … 40		
Gear length L2	[mm]	88,6	102,8	117

Stand: 22. Oktober 2014 – changes reserved

Motor M63/I
with planetary gear P62I LN

excellent drives

- Steel gears, output shaft and housing, Grease lubrication for life, Output shaft in 2 ball bearings, end-plates made of aluminium

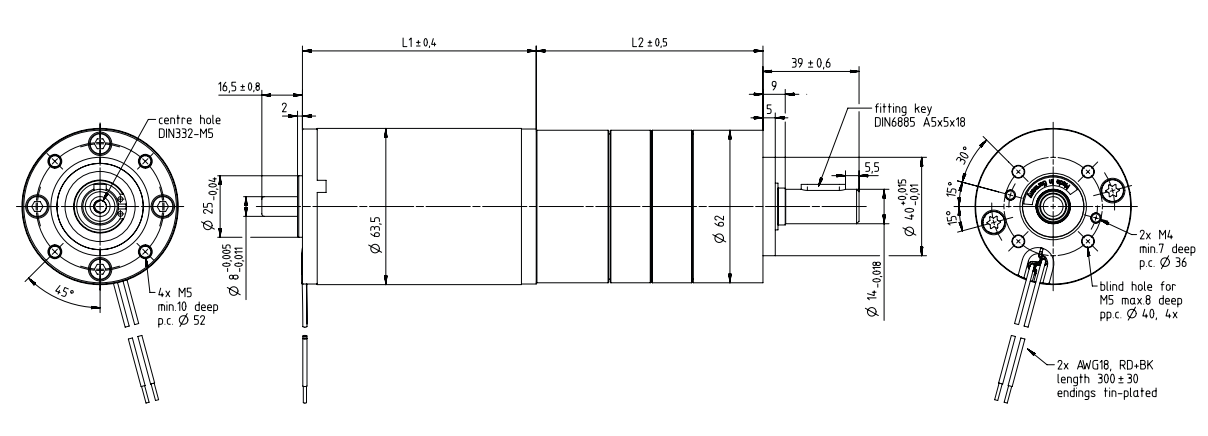

Application on request

Gear reduction table M63xXX/I+ P62I LN

Gear reduction	number of Gear stages	Efficiency	M63x25/I L1 = 95mm		M63x60/I L1 = 130mm	
			Speed	Torque	Speed	Torque
[i = x:1]	[x]	[%]	[1/min]	[Ncm]	[1/min]	[Ncm]
4	1	80	893	45	750	96
9	1	80	361	109	333	216
14	2	75	232	147	214	315
25	2	75	130	263	120	563
45	2	75	72	473	67	1013
50	3	70	65	490	60	1050
81	3	70	40	794	37	1701
166	3	70	20	1627	18	3486
302	3	70	11	2960	10	*) 5000

*) Motor have to be operated with current limitation

General gear data

Number of gear stages	[x]	1	2	3
Maximum torque	[Ncm]	800	2500	5000
Recommended input speed	[1/min]	< 3000		
Permissible axial shaft load	[N]	70	100	150
Permissible radial shaft load	[N]	240	360	520
Backlash unloaded	[°]	0,65	0,7	0,75
Temperature range	[°C]	-30 … 80		
Gear length L2	[mm]	90,7	107,6	124,5

Stand: 22. Oktober 2014 – changes reserved

Motor M80/I
with planetary gear P62I LN

- Steel gears, output shaft and housing, Grease lubrication for life, Output shaft in 2 ball bearings, end-plates made of aluminium

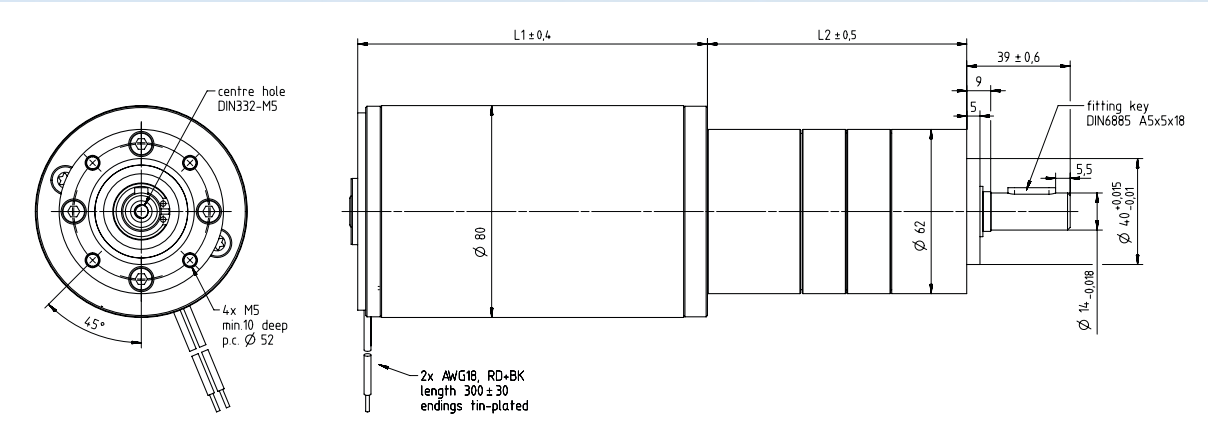

Application on request

Gear reduction table M80xXX/I+ P62I LN

Gear reduction	number of Gear stages	Efficiency	M80x40/I L1 = 132mm		M80x80/I L1 = 172mm	
			Speed	Torque	Speed	Torque
[i = x:1]	[x]	[%]	[1/min]	[Ncm]	[1/min]	[Ncm]
4	1	80	725	122	800	224
9	1	80	322	274	356	504
14	2	75	207	399	229	735
25	2	75	116	713	128	1313
45	2	75	64	1283	79	2363
50	3	70	58	1330	64	2450
81	3	70	36	2155	39	3969
166	3	70	17	4496	19	*) 5000
302	3	70	10	*) 5000	11	*) 5000

*) Motor have to be operated with current limitation

General gear data

Number of gear stages	[x]	1	2	3
Maximum torque	[Ncm]	800	2500	5000
Recommended input speed	[1/min]	< 3000		
Permissible axial shaft load	[N]	70	100	150
Permissible radial shaft load	[N]	240	360	520
Backlash unloaded	[°]	0,65	0,7	0,75
Temperature range	[°C]	-30 … 40		
Gear length L2	[mm]	96,4	113,3	130,2

Stand: 22. Oktober 2014 – changes reserved

Motor M48x50/I
with worm gear SN31

excellent drives

- Suitable for left - and right rotation and changes, duration, - and intermittent operation
- Other ratios, output shafts, protective classes, connection leads and flanges on request

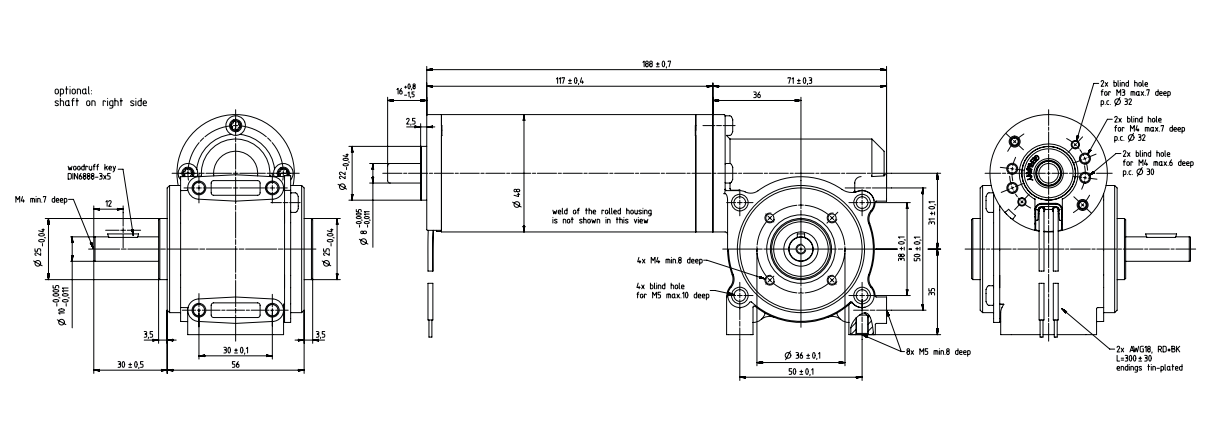

Application on request

Gear reduction table M48x50/I+ SN31

Gear reduction	Efficiency	Speed M48x50/I	Torque M48x50/I
[i = x:1]	[%]	[1/min]	[Ncm]
10	84	305	84
15	72	20	108

General gear data

Maximum torque	[Ncm]	400
Maximum torque (short-term)	[Ncm]	800
Recommended input speed	[1/min]	< 3000
Permissible shaft load	[N] [axial / radial]	200 / 600
Backlash unloaded	[°]	< 0,5
Temperature range	[°C]	-30 bis +80
Weight	[kg]	0,8

Stand: 1. Juli 2014 – changes reserved

Motor M63
with worm gear SN31

- Suitable for left - and right rotation and changes, duration, - and intermittent operation
- Other ratios, output shafts, protective classes, connection leads and flanges on request

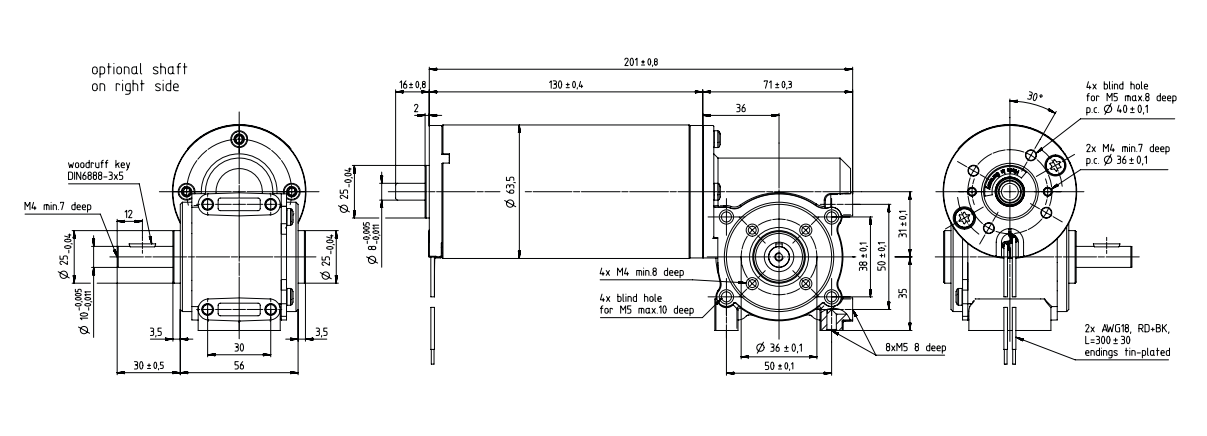

Application on request

Gear reduction table M63xXX/I+ SN31

Gear reduction	Efficiency	Speed M63x60/I	Torque M63x60/I
[i = x:1]	[%]	[1/min]	[Ncm]
10	84	300	252
15	72	200	324

General gear data

Maximum torque	[Ncm]	400
Maximum torque (short-term)	[Ncm]	800
Recommended input speed	[1/min]	< 3000
Permissible shaft load	[N] (axial / radial)	200 / 600
Backlash unloaded	[°]	< 0,5
Temperature range	[°C]	-30 bis +80
Weight	[kg]	0,8

Stand: 1. Juli 2014 – changes reserved

Motor M63
with worm gear SN40

excellent drives

- Suitable for left - and right rotation and changes, duration, - and intermittent operation
- Other ratios, output shafts, protective classes, connection leads and flanges on request

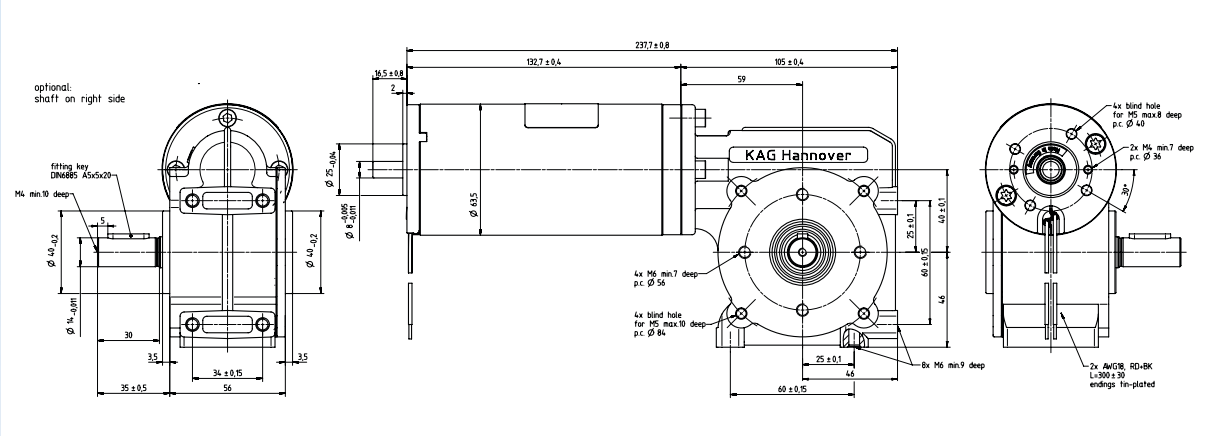

Application on request

Gear reduction table M63xXX/I+ SN40

Gear reduction	Efficiency	Speed M63x60/I	Torque M63x60/I
[i = x:1]	[%]	[1/min]	[Ncm]
10	84	300	252
15	72	200	324

General gear data

Maximum torque	[Ncm]	1500
Maximum torque (short-term)	[Ncm]	2000
Recommended input speed	[1/min]	< 3000
Permissible shaft load	[N] (axial / radial)	300 / 500
Backlash unloaded	[°]	3
Temperature range	[°C]	-30 bis +80
Weight	[kg]	1,5

Stand: 1. Juli 2014 – changes reserved

Motor M42/I
with spur gear S5

- Platinum, gears made of nitrided steel output shaft of steel, grease lubrication, output in sintered bronze bearings, plastic cover
- Optional: output shaft with ball bearings

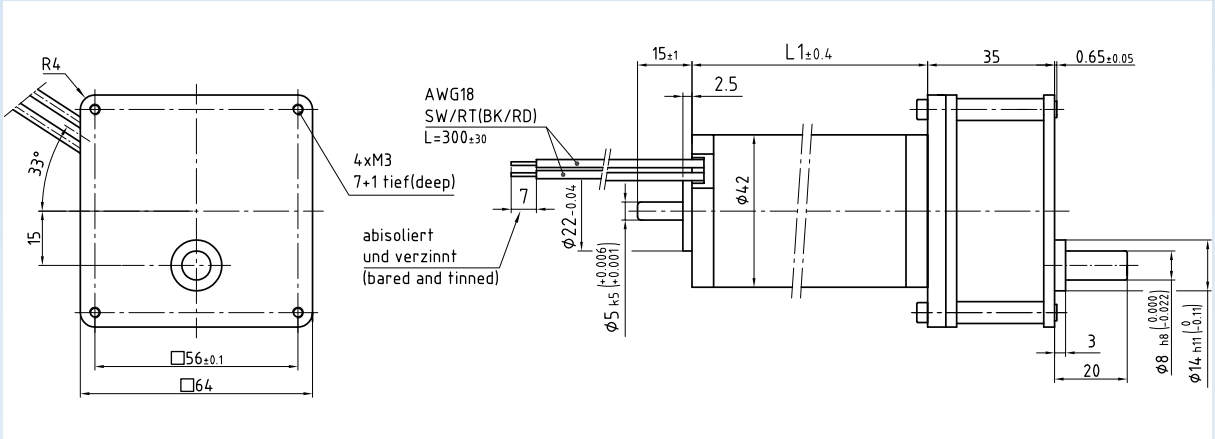

Application on request

Gear reduction table M42xXX/I+ S5

Gear reduction	number of Gear stages	Efficiency	Speed at motor-speed 3000rpm	Continuous torque			
				M42x15/I L = 70mm	M42x20/I L = 75mm	M42x30/I L = 85mm	M42x40/I L = 95mm
[i = x:1]	[x]	[%]	[1/min]	[Ncm]	[Ncm]	[Ncm]	[Ncm]
10	3	73	300	29	37	47	66
30	4	66	100	79	99	129	178
50	4	66	60	132	165	215	297
100	5	59	30	236	295	384	500 *)
250	5	59	12	500 *)	500 *)	500 *)	500 *)
375	5	59	8	500 *)	500 *)	500 *)	500 *)
500	6	53	6	500 *)	500 *)	500 *)	500 *)
1250	6	53	2	500 *)	500 *)	500 *)	500 *)

*) Motor have to be operated with current limitation

General gear data

Number of gear stages	[x]	3, 4, 5, 6
Maximum torque	[Ncm]	500
Recommended input speed	[1/min]	< 5000
Permissible axial shaft load	[N]	20
Permissible radial shaft load	[N]	30
Backlash unloaded	[°]	0,9…2
Temperature range	[°C]	-10 to +65
Gear length L2	[mm]	49

Stand: 22. Januar 2015 – changes reserved

Motor M42/I
with spur gear S90

excellent drives

- Output shaft made of steel, die-cast zinc housing, noise-optimized input stage made of plastic, output ball bearings, grease lubrication

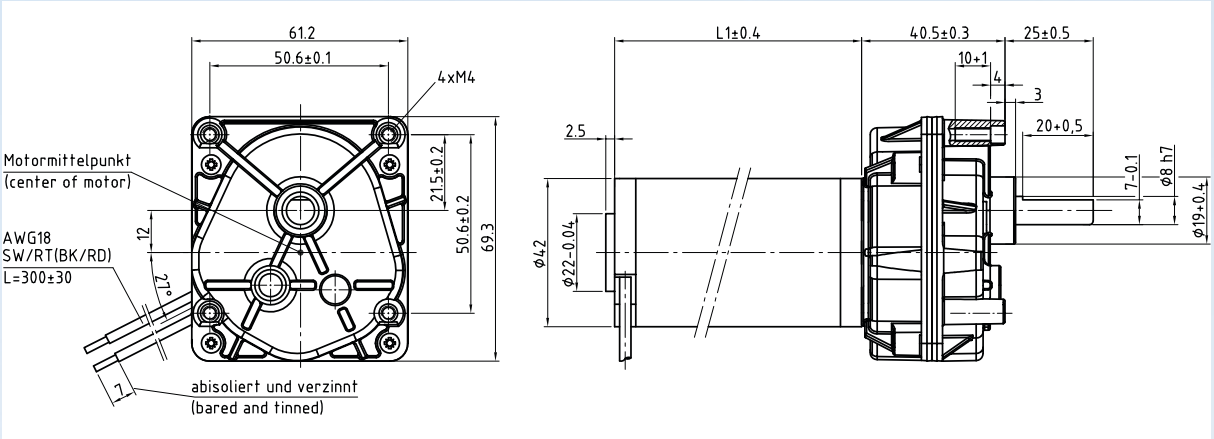

Application on request

Gear reduction table M42xXX/I+ S90

Gear reduction	number of Gear stages	Efficiency	Speed at motor-speed 3000rpm	Continuous torque			
				M42x15/I L = 70mm	M42x20/I L = 75mm	M42x30/I L = 85mm	M42x40/I L = 95mm
[i = x:1]	[x]	[%]	[1/min]	[Ncm]	[Ncm]	[Ncm]	[Ncm]
19	2	81	160	61	76	99	123
27	2	81	112	87	109	141	175
31	2	81	98	99	124	161	209
53	3	73	56	155	194	252	310
68	3	73	44	198	247	322	397
93	3	73	32	271	338	440	543
142	3	73	21	416	520	676	700 *)
222	4	66	14	586	733	900 *)	900 *)

*) Motor have to be operated with current limitation

General gear data

Number of gear stages	[x]	2	3	4
Maximum torque	[Ncm]	500	700	900
Recommended input speed	[1/min]	< 3000		
Permissible axial shaft load	[N]	40	40	40
Permissible radial shaft load	[N]	120	120	120
Backlash unloaded	[°]	0,7 - 1,6	0,7 - 1,6	0,7 - 1,6
Temperature range	[°C]	-20 to +80		
Gear length L2	[mm]	40,5	40	40

Stand: 22. Januar 2015 – changes reserved

Brake B37
for motor series M42

- Electromagnetic fail-safe spring-applied brake
- Chromated coil housing
- Axial stroke max. 0.5 mm
- Degree of protection IP00

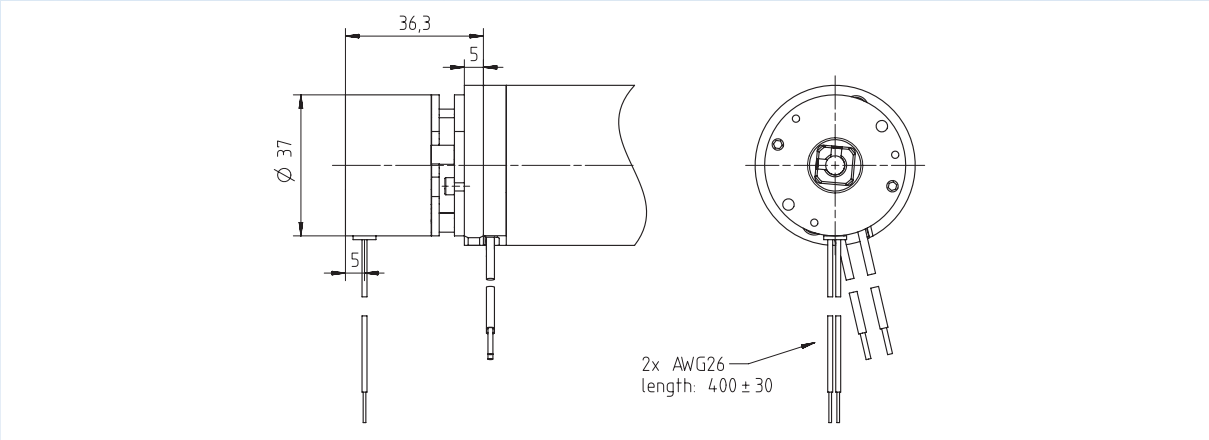

Application on request

Mechanical Data

Holding torque	Seperate time	Link time	max. speed	Weight	Temperature range
[Ncm]	[ms]	[ms]	[1/min]	[kg]	[°C]
24	17	11	5000	0,2	-40 to +105

Electrical Data

Voltage	Power	Current	Resistance
[VDC]	[W]	[A]	[Ω]
24	5	0,21	114

Stand: 10. September 2014 – changes reserved

Brake B47
for motor series M48

excellent drives

- Electromagnetic fail-safe spring-applied brake
- Chromated coil housing
- Axial stroke max. 0.5 mm
- Degree of protection IP00
- optional hand breather

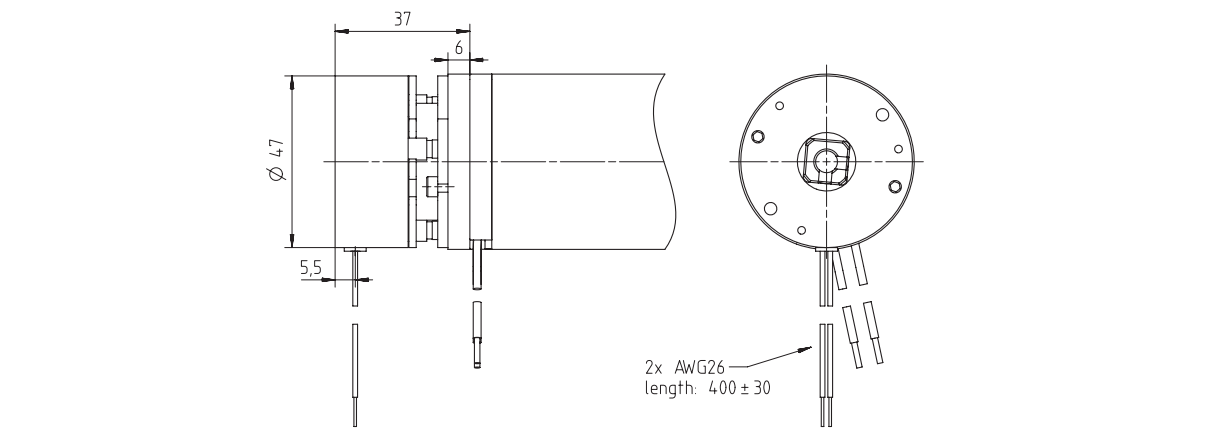

Application on request

Mechanical Data

Holding torque	Seperate time	Link time	max. speed	Weight	Temperature range
[Ncm]	[ms]	[ms]	[1/min]	[kg]	[°C]
50	17	8	5000	0,25	-40 to +105

Electrical Data

Voltage	Power	Current	Resistance
[VDC]	[W]	[A]	[Ω]
24	6,6	0,275	87

Stand: 10. September 2014 – changes reserved

Brake B56
for motor series M63

- Electromagnetic fail-safe spring-applied brake
- Chromated coil housing
- Degree of protection IP00

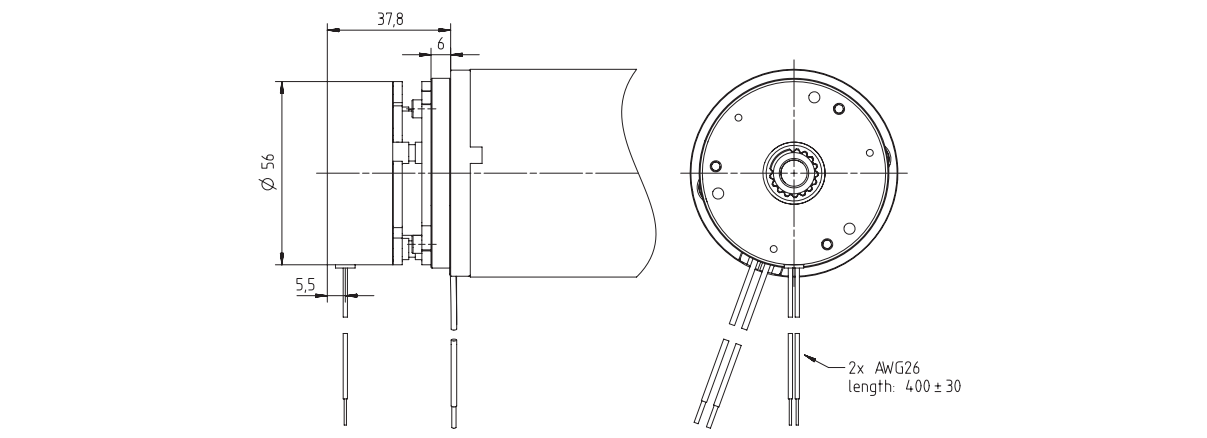

Application on request

Mechanical Data

Holding torque	Seperate time	Link time	max. speed	Weight	Temperature range
[Ncm]	[ms]	[ms]	[1/min]	[kg]	[°C]
100	18	12,5	5000	0,4	-40 to +105

Electrical Data

Voltage	Power	Current	Resistance
[VDC]	[W]	[A]	[Ω]
24	9	0,375	64

Stand: 10. September 2014 – changes reserved

Magnetic encoder
IGM 4/2 for M42, M48

excellent drives

- Touchless and wear resistant magnetic incremental encoder
- This encoder supply symmetric amplitude in addiction of supply voltage
- Open Collector output
- Integrate Pull-Up resistors

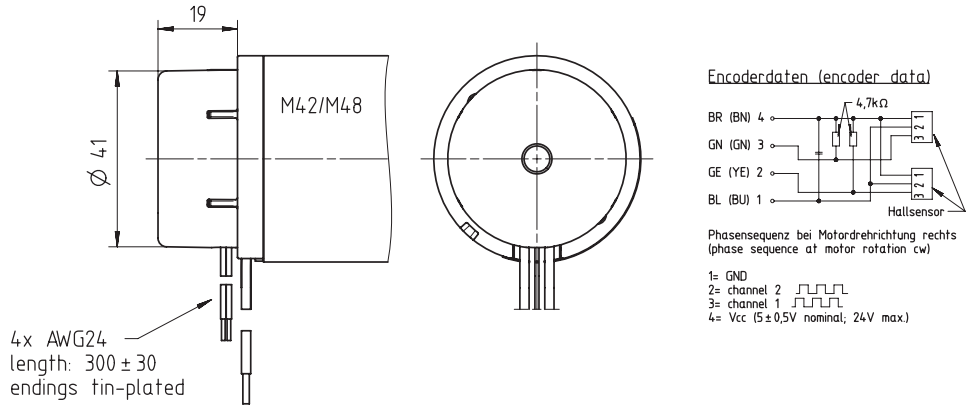

Application on request

General Data

Impulses per revolution	[x]	4
Number of channels	[y]	2
Supply voltage	[V]	5 to 24
Current consumption	[mA]	3,5
Output current (operated) per channel	[mA]	max. 20
Temperature rang	[°C]	-40 to +100
Protection class with / without cover		IP30 / IP00

Stand: 4. November 2014 – changes reserved

Magnetic encoder
IGM 12/2 for M63, M80

- Touchless and wear resistant magnetic incremental encoder
- This encoder supply symmetric amplitude in addiction of supply voltage
- Open Collector output
- Integrate Pull-Up resistors

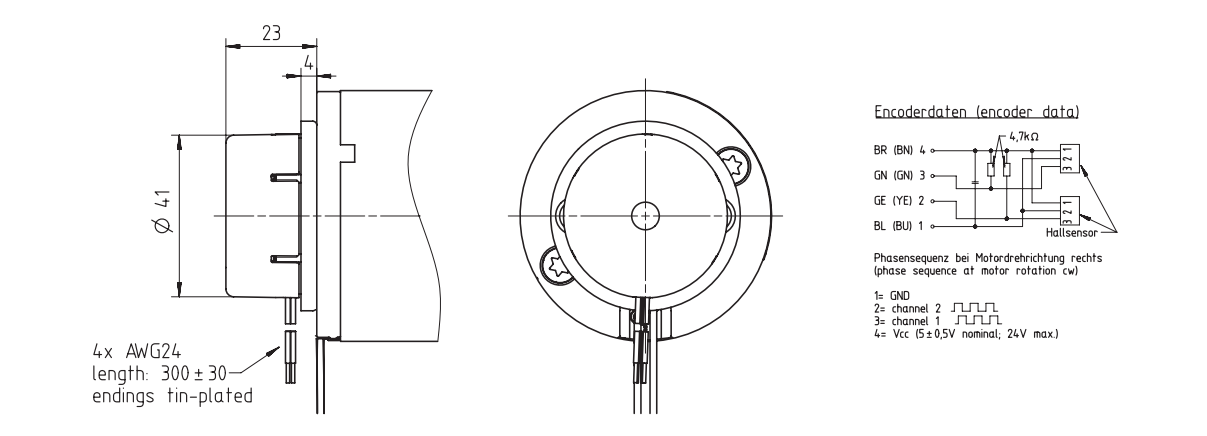

Application on request

General Data

Impulses per revolution	[x]	12
Number of channels	[y]	2
Supply voltage	[V]	5 to 24
Current consumption	[mA]	3,5
Output current (operated) per channel	[mA]	max. 20
Temperature rang	[°C]	-40 to +100
Protection class with / without cover		IP30 / IP00

Stand: 4. November 2014 – changes reserved

Magnetic encoder
IGM 4/2 for M42, M48

excellent drives

- Touchless and wear resistant magnetic incremental encoder
- This encoder supply symmetric amplitude in addiction of supply voltage
- Open Collector output
- Integrate Pull-Up resistors

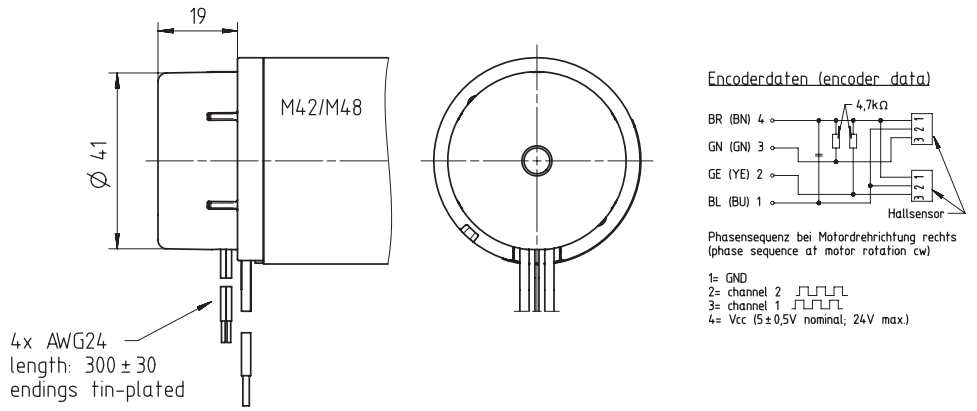

Application on request

General Data

Impulses per revolution	[x]	4
Number of channels	[y]	2
Supply voltage	[V]	5 to 24
Current consumption	[mA]	3,5
Output current (operated) per channel	[mA]	max. 20
Temperature rang	[°C]	-40 to +100
Protection class with / without cover		IP30 / IP00

Stand: 4. November 2014 – changes reserved

Magnetic encoder
IGM 4/2 for M63, M80

- Touchless and wear resistant magnetic incremental encoder
- This encoder supply symmetric amplitude in addiction of supply voltage
- Open Collector output
- Integrate Pull-Up resistors

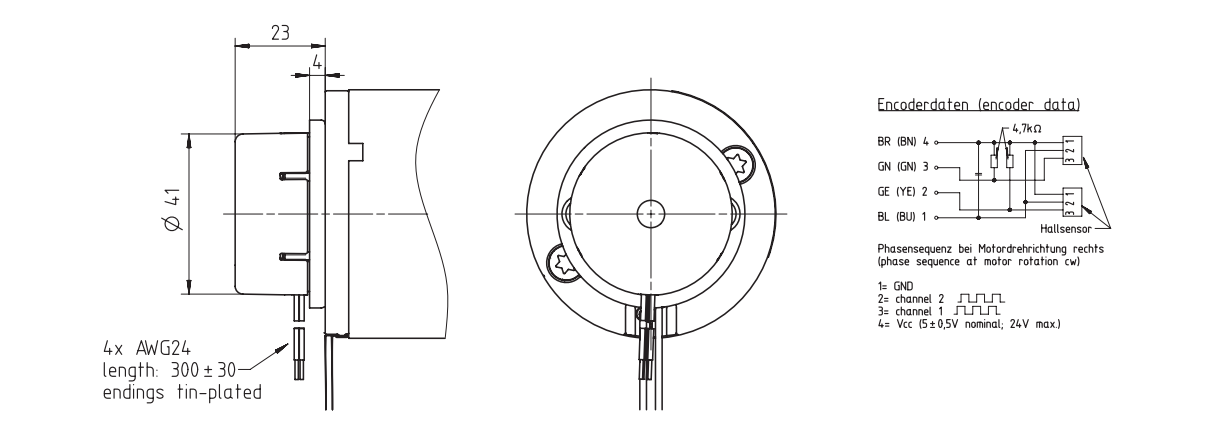

Application on request

General Data

Impulses per revolution	[x]	4
Number of channels	[y]	2
Supply voltage	[V]	5 to 24
Current consumption	[mA]	3,5
Output current (operated) per channel	[mA]	max. 20
Temperature rang	[°C]	-40 to +100
Protection class with / without cover		IP30 / IP00

Stand: 4. November 2014 – changes reserved

Optical encoder
IGO 100/2 “SN“ for M42, M48

excellent drives

- Touchless and wear resistant optical incremental encoder
- This encoder supply two quadrative, TTL-compatible channels with phase 110°
- Connectors z.B. Molex plug 5poles type 5051M with bush Typ 2759
- Optional: reference pulse

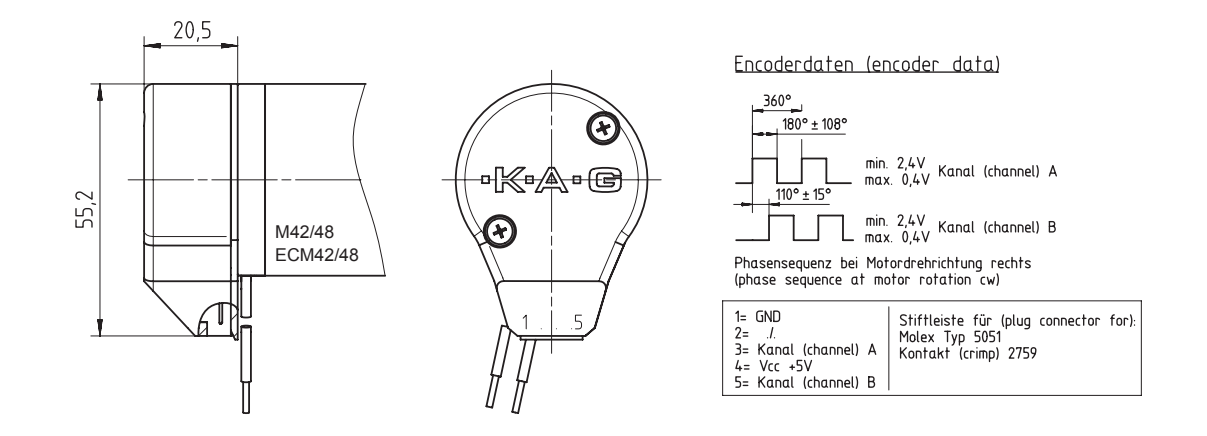

Application on request

General Data

Impulses per revolution	[x]	100
Number of channels	[y]	2
Supply voltage	[V]	5 ±10%
Current consumption	[mA]	30
Output current (operated) per channel	[mA]	-
Temperature rang	[°C]	0 to +70
Protection class with / without cover		IP30 / IP00

Stand: 4. November 2014 – changes reserved

Optical encoder
IGO 100/2 “SN“ for M63, M80

- Touchless and wear resistant optical incremental encoder
- This encoder supply two quadrative, TTL-compatible channels with phase 110°
- Connectors z.B. Molex plug 5poles type 5051M with bush Typ 2759
- Optional: reference pulse

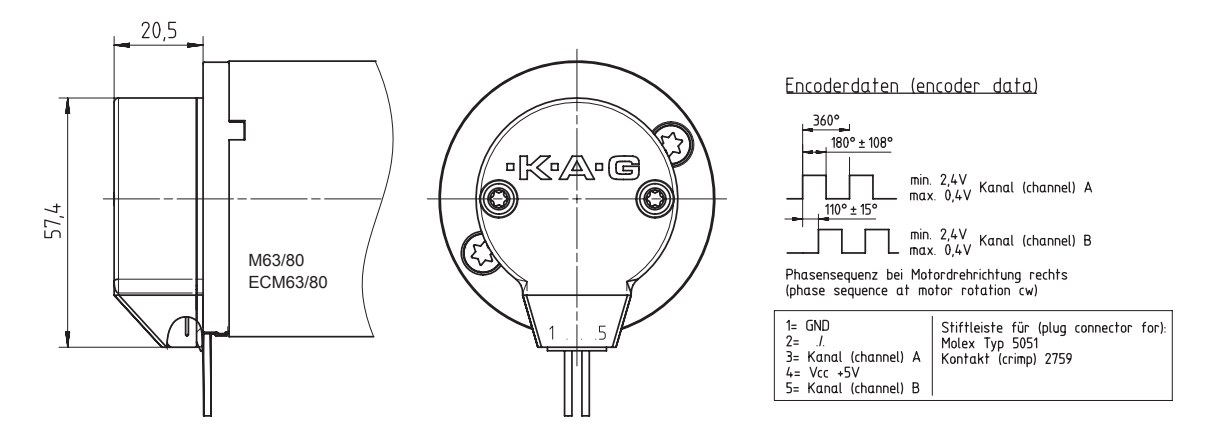

Application on request

General Data

Impulses per revolution	[x]	100
Number of channels	[y]	2
Supply voltage	[V]	5 ±10%
Current consumption	[mA]	30
Output current (operated) per channel	[mA]	-
Temperature rang	[°C]	0 to +70
Protection class with / without cover		IP30 / IP00

Stand: 4. November 2014 – changes reserved

Optical encoder IGO500/2 for M42, M48

excellent drives

- Touchless and wear resistant optical incremental encoder
- This encoder supply two quadrative, TTL-compatible channels with phase 110°
- Connectors z.B. Molex plug 5poles type 5051M with bush Typ 2759
- Optional: reference pulse

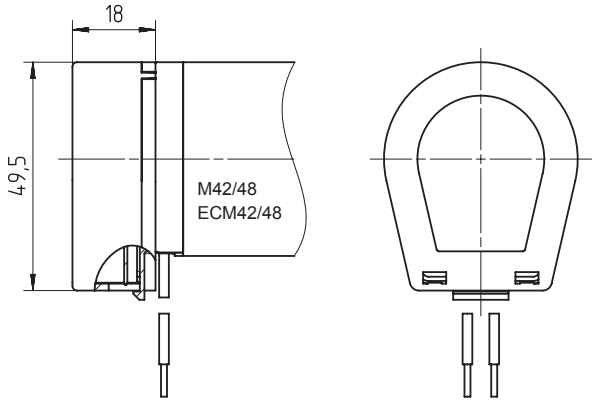

Encoderdaten (encoder data)

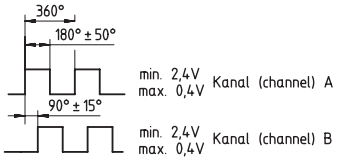

Phasensequenz bei Motordrehrichtung rechts
(phase sequence at motor rotation cw)

1= GND 2= ./. 3= Kanal (channel) A 4= Vcc +5V 5= Kanal (channel) B	Stiftleiste für (plug connector for): Molex Typ 5051 Kontakt (crimp) 2759

Application on request

General Data

Impulses per revolution	[x]	500
Number of channels	[y]	2
Supply voltage	[V]	5 ±10%
Current consumption	[mA]	17
Output current (operated) per channel	[mA]	-
Temperature rang	[°C]	-40 to +100
Protection class with / without cover		IP30 / IP00

Stand: 4. November 2014 – changes reserved

Optical encoder
IGO500/2 to M63, M80

- Touchless and wear resistant optical incremental encoder
- This encoder supply two quadrative, TTL-compatible channels with phase 110°
- Connectors z.B. Molex plug 5poles type 5051M with bush Typ 2759
- Optional: reference pulse

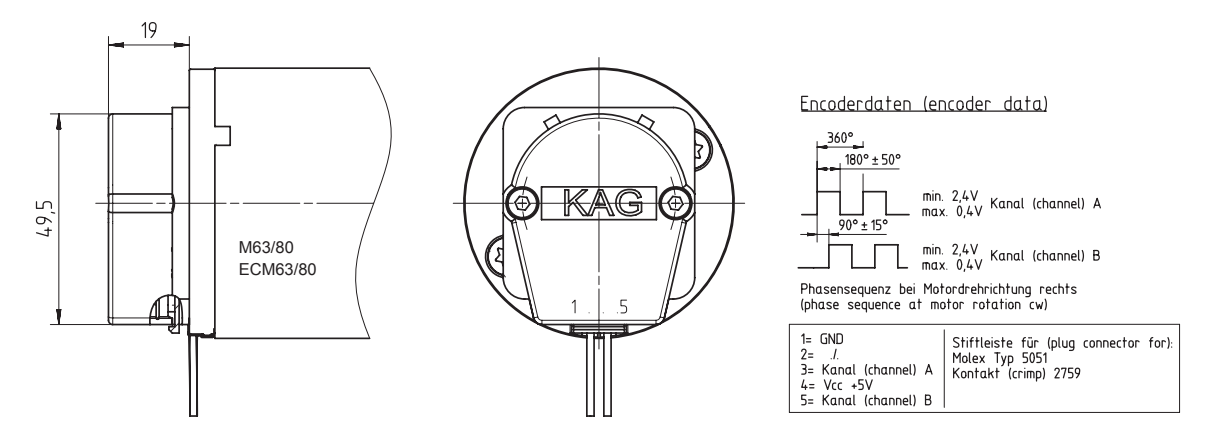

Application on request

General Data

Impulses per revolution	[x]	500
Number of channels	[y]	2
Supply voltage	[V]	5 ±10%
Current consumption	[mA]	17
Output current (operated) per channel	[mA]	-
Temperature rang	[°C]	-40 to +100
Protection class with / without cover		IP30 / IP00

Stand: 4. November 2014 – changes reserved