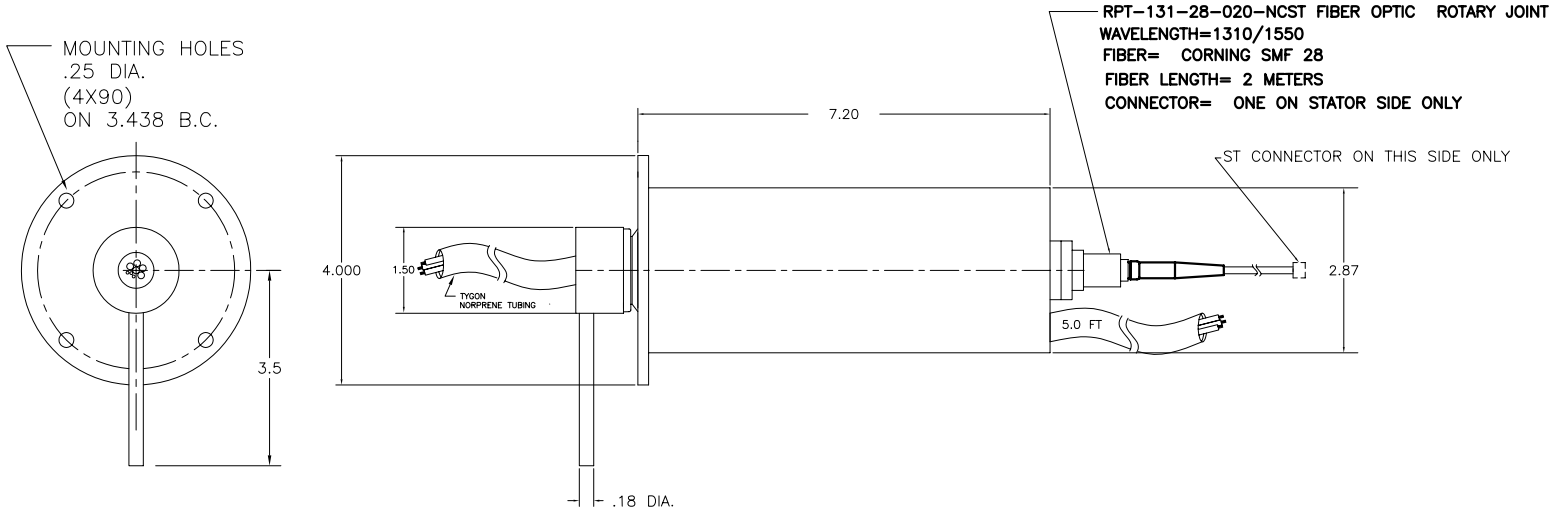

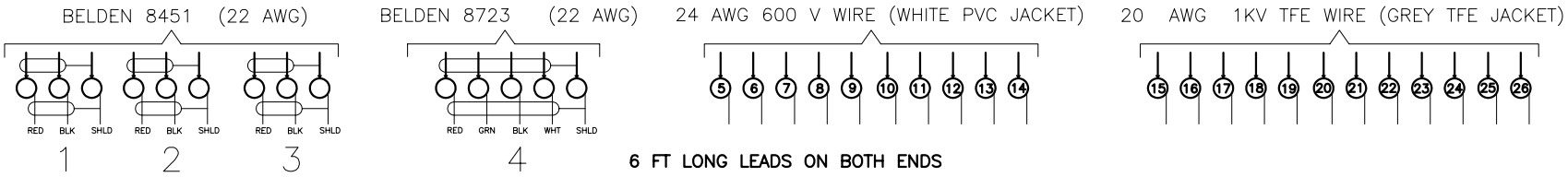

6 FT LONG LEADS ON BOTH ENDS

MECHANICAL SPECIFICATIONS

COIN SILVER RINGS
SILVER-GRAPHITE CONTACTS
BALL BEARING ALIGNMENT
SPLASH PROOF
STN STL ENCASEMENT PARTS
RPM < 200

CONTENTS OF THIS DRAWING ARE PROPRIETARY AND CONFIDENTIAL. THEY ARE NOT TO BE DUPLICATED OR DISCLOSED TO OTHER PARTIES WITHOUT WRITTEN AUTHORIZATION FROM ALPHA INSTRUMENTS, INC

PRODUCT ID	670
PT NAME	OUTLINE
DRAWN BY	FC
MATERIAL	.
NO REQD	.
FINISH	
REFERENCE	348

ALPHA SLIP RINGS, INC
7801 N. LAMAR - STE E180 - AUSTIN, TX 78752 www.alphasliprings.com

PART NUMBER
347-36 FIBER OPTIC SLIP RING

SIZE	DATE	DWG NO	REV
D	04/01/08	347-36	
SCALE 1-1	WEIGHT	SHEET 1OF1	